

Product data sheet

XCJ102C

Limit switch XCJ, steel roller plunger, horizontal actuation

Main

Range of product	OsiSense XC
Series name	Basic
Product or component type	Limit switch
Device short name	XCJ
Product specific application	Light to medium duty
ETIM classification	ETIM 9 - EC000030 - End switch
Body type	Fixed
Head type	Plunger head
Material	Plastic and metal
Fixing mode	By the body
Movement of operating head	Linear
Type of operator	Spring return roller plunger stainless steel
Switch actuation	On end
Type of approach	Lateral approach, 1 direction
Maximum force for tripping	4 N
Number of poles	1
Product certifications	CCC CE
Marking	CCC CE
Standards	GB 14048.5 IEC 60947-5-1
Indivisible sale quantity	1

Complementary

Mechanical durability	10000000 cycles
Minimum actuation speed	0.01 mm/s
Maximum actuation speed	0.5 m/s
Cable entry	1 flexible rubber cable gland, cable outer diameter: 8.5-10.5 mm
Contact code designation	A300, AC (Ue = 240 V), Ie = 10 A, Ithe = 10 A conforming to IEC 60947-5-1, R300, DC (Ue = 220 V), Ie = 0.3 A conforming to IEC 60947-5-1

The information provided in this documentation contains general descriptions and/or technical characteristics of the performance of the products contained herein.
This documentation is not intended as a substitute for and is not to be used for determining suitability or reliability of these products for specific user applications.
It is the duty of any such user or integrator to perform the appropriate and complete risk analysis, evaluation and testing of the products with respect to the relevant specific application or use thereof.
Neither TMSS Holding nor any of its affiliates or subsidiaries shall be responsible or liable for misuse of the information contained herein.

Electrical durability	800000 cycles, AC, 10 A, 220 V
Electrical connection	Screw-clamp terminals
Positive opening	Without
Contacts insulation form	C
Terminals description ISO n°1	(NO-NC-C)OF
Contact operation	Snap action
Operating rate	120 c.p.m
[Uimp] rated impulse withstand voltage	4 kV conforming to IEC 60664
Resistance across terminals	25 MOhm
Electrical shock protection class	Class II conforming to IEC 60947-5-1
Minimum release force	0.98 N
Width	22 mm
Depth	70 mm
Product weight	0.093 kg

Environment

IP degree of protection	IP40 conforming to IEC 60529
Ambient air temperature for operation	-25…70 °C
Ambient air temperature for storage	-40…70 °C
Shock resistance	10 gn for 11 ms conforming to IEC 60068-2-27
Vibration resistance	+/- 3 mm (f= 10-55 Hz) conforming to IEC 60068-2-6

Offer Sustainability

California proposition 65	WARNING: This product can expose you to chemicals including: Diisononyl phthalate (DINP), which is known to the State of California to cause cancer, and Di-isodecyl phthalate (DIDP), which is known to the State of California to cause birth defects or other reproductive harm. For more information go to www.P65Warnings.ca.gov

Warranty

Warranty	18 months

Packing Units

Country of origin	CN (China)
Unit type of package 1	PCE
Number of units in package 1	1
New Package 1 GTIN-13	3666916058121
Package 1 height	2 cm
Package 1 width	7 cm
Package 1 length	7.5 cm
Package 1 weight	0.086 kg

Unit type of package 2	BB1
Number of units in package 2	10
New Package 2 GTIN 14	13666916058128
Package 2 height	8 cm
Package 2 width	8.5 cm
Package 2 length	22 cm
Package 2 weight	992 g
Unit type of package 3	S03
Number of units in package 3	150
New Package 3 GTIN 14	23666916058125
Package 3 height	30 cm
Package 3 width	30 cm
Package 3 length	40 cm
Package 3 weight	15.301 kg

Technical Drawings

Dimensions

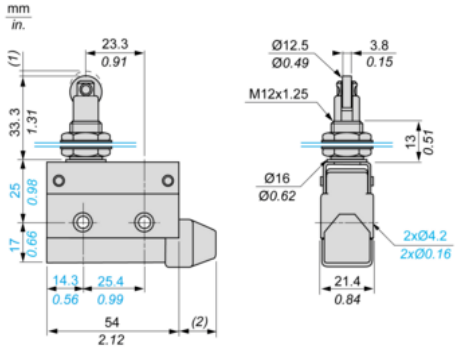

(1) :
(2) :

Connection and Schema

Wiring Diagram



Single pole 1C/O

Technical Description

Type of Operator and Functional Diagram, Travel Distance

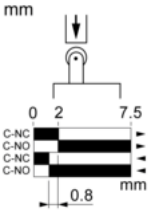

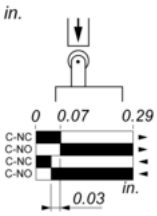

(1)
(2)
(3)
(4)

(1) :
(2) :
(3) :
(4) :

Mounting and Fixing

Recommended

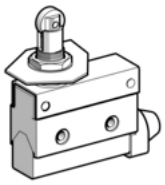

Mounting and Fixing

To be Avoided

