

Product data sheet

XCKJ10513

Limit switch XCKJ, steel roller lever, 1NC+1NO, snap action, Pg13 cable entry

Main

Range of product	Telemecanique Limit switches XC Standard
Series name	Standard format
Product or component type	Limit switch
Device short name	XCKJ
Sensor design	Form A conforming to CENELEC EN 50041
ETIM classification	ETIM 9 - EC000030 - End switch
Body type	Fixed
Head type	Rotary head
Material	Metal
Body material	Zamak
Head material	Zamak
Fixing mode	By the body
Movement of operating head	Rotary
Type of operator	Spring return roller lever metal
Switch actuation	By 30° cam
Type of approach	Lateral approach, 1 or 2 programmable direction
Number of poles	2
Product certifications	CCC CSA UL
Standards	CENELEC EN 50041 CSA C22.2 No 14 IEC 60204-1 IEC 60947-5-1 UL 508
Indivisible sale quantity	1

Complementary

Mechanical durability	30000000 cycles
Minimum torque for tripping	0.25 N.m
Maximum actuation speed	1.5 m/s
Cable entry	1 entry tapped for Pg 13.5 cable gland, cable outer diameter: 9-12 mm

The information provided in this documentation contains general descriptions and/or technical characteristics of the performance of the products contained herein.
This documentation is not intended as a substitute for and is not to be used for determining suitability or reliability of these products for specific user applications.
It is the duty of any such user or integrator to perform the appropriate and complete risk analysis, evaluation and testing of the products with respect to the relevant specific application or use thereof.
Neither TMSS Holding nor any of its affiliates or subsidiaries shall be responsible or liable for misuse of the information contained herein.

Electrical durability	5000000 cycles, DC-13, inductive load type, 120 V, 4 W, operating rate <60 cyc/mn, load factor: 0.5 conforming to IEC 60947-5-1 appendix C, 5000000 cycles, DC-13, inductive load type, 24 V, 10 W, operating rate <60 cyc/mn, load factor: 0.5 conforming to IEC 60947-5-1 appendix C, 5000000 cycles, DC-13, inductive load type, 48 V, 7 W, operating rate <60 cyc/mn, load factor: 0.5 conforming to IEC 60947-5-1 appendix C
Electrical connection	Screw-clamp terminals, clamping capacity: 1 x 0.34...2 x 1.5 mm²
Positive opening	With
Positive opening minimum torque	0.5 N.m
Contacts insulation form	Zb
Contacts type and composition	1 NC + 1 NO
Terminals description ISO n°1	(13-14)NO (21-22)NC
Contact operation	Snap action
[Uimp] rated impulse withstand voltage	6 kV conforming to IEC 60664, 6 kV conforming to IEC 60947-1
[Ui] rated insulation voltage	300 V conforming to UL 508, 500 V (pollution degree 3) conforming to IEC 60947-1, 300 V conforming to CSA C22.2 No 14
Overvoltage category	Class I conforming to IEC 61140, class I conforming to NF C 20-030
[Ie] rated operational current	3 A at 240 V, AC-15, A300 conforming to IEC 60947-5-1 appendix A, 0.27 A at 250 V, DC-13, Q300 conforming to IEC 60947-5-1 appendix A
[Ithe] conventional enclosed thermal current	10 A
Resistance across terminals	25 MOhm conforming to IEC 60255-7 category 3
Short-circuit protection	10 A cartridge fuse, type gG
Width	40 mm
Depth	44 mm
Product weight	0.49 kg

Environment

IK degree of protection	IK07 conforming to IEC 62262
IP degree of protection	IP66 conforming to IEC 60529
Ambient air temperature for operation	-25...70 °C
Ambient air temperature for storage	-40...70 °C
Shock resistance	50 gn for 11 ms conforming to IEC 60068-2-27
Vibration resistance	25 gn (f= 10-500 Hz) conforming to IEC 60068-2-6
Protective treatment	TH

Offer Sustainability

California proposition 65	WARNING: This product can expose you to chemicals including: Diisononyl phthalate (DINP), which is known to the State of California to cause cancer, and Di-isodecyl phthalate (DIDP), which is known to the State of California to cause birth defects or other reproductive harm. For more information go to www.P65Warnings.ca.gov

Warranty

Warranty	18 months

Packing Units

Country of origin	ID (Indonesia)
Unit type of package 1	PCE
Number of units in package 1	1
New Package 1 GTIN-13	3666916094549
Package 1 height	4.5 cm
Package 1 width	7 cm
Package 1 length	13 cm
Package 1 weight	0.502 kg
Unit type of package 2	S02
Number of units in package 2	18
New Package 2 GTIN 14	13666916094546
Package 2 height	15 cm
Package 2 width	30 cm
Package 2 length	40 cm
Package 2 weight	9.203 kg
Unit type of package 3	CAR
Number of units in package 3	1
New Package 3 GTIN 14	23666916094543
Package 3 height	4.5 cm
Package 3 width	7 cm
Package 3 length	13 cm
Package 3 weight	0.486 kg

Technical Drawings

Dimensions

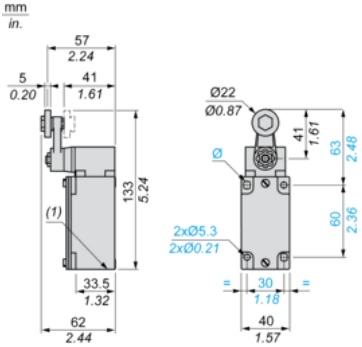

(1)

Mounting with Cable Entry

Position of Cable Gland

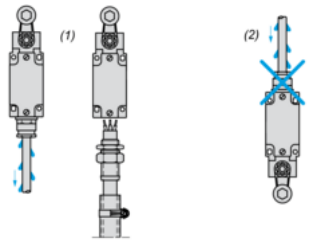

(1)
(2)

Mounting with Rotary Heads and Levers

Type of Cam

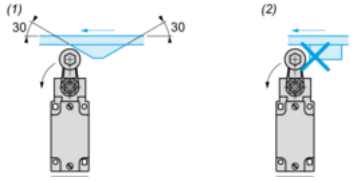

(1)
(2)

Setting-up with Lever Head

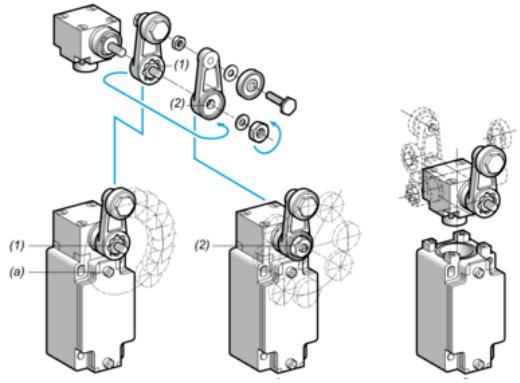

(1)
(2)
(a)

Setting-up with Head ZCKE05

Direction of Actuation Programming

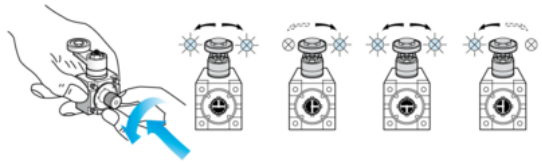

Wiring Diagram

2-pole NC + NO Snap Action

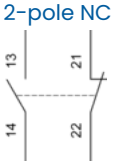

Characteristics of Actuation

Switch Actuation on End

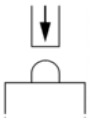

Functionnal Diagram

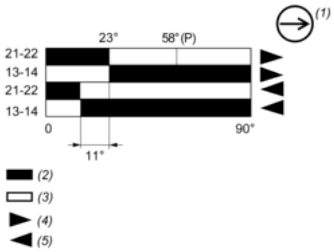

(P)
(1)
(2)
(3)
(4)
(5)