

Product data sheet

XCKT2121P16

Limit switch XCKT, plastic roller lever, 1NC+1NO, M16 cable entry

Main

Range of product	Telemecanique Limit switches XC Standard
Series name	Standard format
Product or component type	Limit switch
Device short name	XCKT
Sensor design	Compact form E conforming to CENELEC EN 50047
Device presentation	Complete product
ETIM classification	ETIM 9 - EC000030 - End switch
Body type	Fixed
Head type	Plunger head
Material	Plastic
Body material	Plastic
Head material	Zamak
Fixing mode	By the body
Movement of operating head	Linear
Type of operator	Spring return roller lever plunger thermoplastic
Switch actuation	By 30° cam
Type of approach	Lateral approach, 1 direction
Number of poles	2
Product certifications	CCC CSA UL
Standards	CSA C22.2 No 14 IEC 60204-1 IEC 60947-5-1 UL 508
Indivisible sale quantity	1

Complementary

Mechanical durability	15000000 cycles
Minimum force for tripping	6 N
Maximum actuation speed	1 m/s
Cable entry	2 entries tapped for M16 x 1.5 cable gland, cable outer diameter: 4-8 mm

The information provided in this documentation contains general descriptions and/or technical characteristics of the performance of the products contained herein.
This documentation is not intended as a substitute for and is not to be used for determining suitability or reliability of these products for specific user applications.
It is the duty of any such user or integrator to perform the appropriate and complete risk analysis, evaluation and testing of the products with respect to the relevant specific application or use thereof.
Neither TMSS Holding nor any of its affiliates or subsidiaries shall be responsible or liable for misuse of the information contained herein.

Contact code designation	A300, AC-15 (Ue = 240 V), Ie = 3 A, Ithe = 10 A conforming to IEC 60947-5-1 appendix A, Q300, DC-13 (Ue = 250 V), Ie = 0.27 A conforming to IEC 60947-5-1 appendix A
Repeat accuracy	0.1 mm on the tripping points with 1 million operating cycles
Electrical durability	5000000 cycles, DC-13, 120 V, 4 W, operating rate <60 cyc/mn, load factor: 0.5 conforming to IEC 60947-5-1 appendix C, 5000000 cycles, DC-13, 24 V, 10 W, operating rate <60 cyc/mn, load factor: 0.5 conforming to IEC 60947-5-1 appendix C, 5000000 cycles, DC-13, 48 V, 7 W, operating rate <60 cyc/mn, load factor: 0.5 conforming to IEC 60947-5-1 appendix C
Electrical connection	Screw-clamp terminals, clamping capacity: 1 x 0.34...2 x 1.5 mm²
Positive opening	With
Positive opening minimum force	18 N
Contacts insulation form	Zb
Contacts type and composition	1 NC + 1 NO
Terminals description ISO n°1	(13-14)NO (21-22)NC
Contact operation	Snap action
[Uimp] rated impulse withstand voltage	6 kV conforming to IEC 60664, 6 kV conforming to IEC 60947-1
[Ui] rated insulation voltage	300 V conforming to UL 508, 500 V (pollution degree 3) conforming to IEC 60947-1, 300 V conforming to CSA C22.2 No 14
Resistance across terminals	25 MOhm conforming to IEC 60255-7 category 3
Electrical shock protection class	Class II conforming to IEC 61140, class II conforming to NF C 20-030
Short-circuit protection	10 A cartridge fuse, type gG
Width	58 mm
Depth	30 mm
Product weight	0.115 kg

Environment

IK degree of protection	IK04 conforming to IEC 62262
IP degree of protection	IP66 conforming to IEC 60529, IP67 conforming to IEC 60529
Ambient air temperature for operation	-25...70 °C
Ambient air temperature for storage	-40...70 °C
Shock resistance	50 gn for 11 ms conforming to IEC 60068-2-27
Vibration resistance	25 gn (f= 10-500 Hz) conforming to IEC 60068-2-6
Protective treatment	TC

Offer Sustainability

California proposition 65	WARNING: This product can expose you to chemicals including: Diisononyl phthalate (DINP), which is known to the State of California to cause cancer, and Di-isodecyl phthalate (DIDP), which is known to the State of California to cause birth defects or other reproductive harm. For more information go to www.P65Warnings.ca.gov

Warranty

Warranty	18 months

Packing Units

Country of origin	ID (Indonesia)
Unit type of package 1	PCE
Number of units in package 1	1
New Package 1 GTIN-13	3666916093528
Package 1 height	3.3 cm
Package 1 width	6.5 cm
Package 1 length	9.8 cm
Package 1 weight	0.115 kg
Unit type of package 2	S02
Number of units in package 2	58
New Package 2 GTIN 14	13666916093525
Package 2 height	15 cm
Package 2 width	30 cm
Package 2 length	40 cm
Package 2 weight	6.318 kg
Unit type of package 3	CAR
Number of units in package 3	1
New Package 3 GTIN 14	23666916093522
Package 3 height	9.8 cm
Package 3 width	3.3 cm
Package 3 length	6.5 cm
Package 3 weight	0.102 kg

Technical Drawings

Dimensions

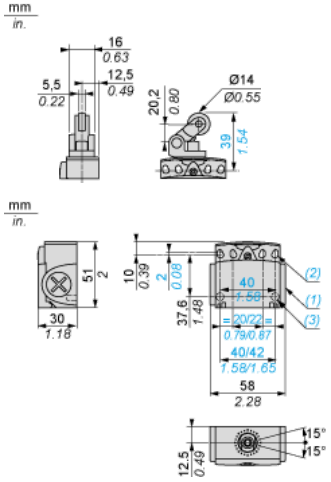

- (1) Tapped entry for M16 x 1.5
- (2) 4 elongated holes Ø 4.3 x 6.3 mm on 22/42mm ctrs, 4 holes Ø 4.3 on 20/40 mm ctrs.
- (3) 2 x Ø 3 holes for support studs, depth 4 mm.

Mounting with Cable Entry

Position of Cable Gland

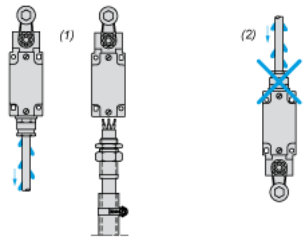

- (1) Recommended
- (2) To be avoided

Setting-up

Plunger or Multi-directional Heads

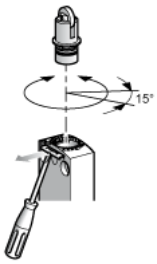

Wiring Diagram

2-pole NC + NO Snap Action

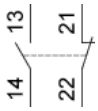

Characteristics of Actuation

Switch Actuation by 30° Cam

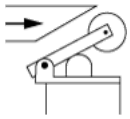

Functionnal Diagram

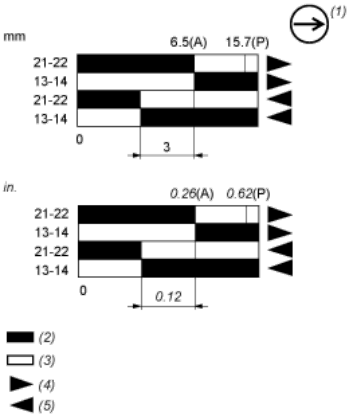

- (P) Positive opening point
- (A) Cam displacement
- (1) NC contact with positive opening operation
- (2) Closed
- (3) Open
- (4) Tripping
- (5) Resetting