

Product data sheet

XCMD2145L1

Limit switch XCMD, plastic roller lever, 1NC+1NO, snap action, 1 m cable

Main

Range of product	Telemecanique Limit switches XC Standard
Series name	Standard format
Product or component type	Limit switch
Device short name	XCMD
Sensor design	Miniature
Device presentation	Complete product
ETIM classification	ETIM 9 - EC000030 - End switch
Body type	Fixed
Head type	Rotary head
Material	Metal
Body material	Zamak
Head material	Zamak
Fixing mode	By the body
Movement of operating head	Rotary
Type of operator	Spring return roller lever thermoplastic variable length
Switch actuation	By 30° cam
Type of approach	Lateral approach, 2 directions
Number of poles	2
Product certifications	CCC CSA UL
Standards	CSA C22.2 No 14 IEC 60204-1 IEC 60947-5-1 UL 508
Range compatibility	TE LIMIT SWTES XC STNDRD
Indivisible sale quantity	1

Complementary

Mechanical durability	10000000 cycles
Minimum force for tripping	0.1 N
Maximum actuation speed	1.5 m/s

The information provided in this documentation contains general descriptions and/or technical characteristics of the performance of the products contained herein.
This documentation is not intended as a substitute for and is not to be used for determining suitability or reliability of these products for specific user applications.
It is the duty of any such user or integrator to perform the appropriate and complete risk analysis, evaluation and testing of the products with respect to the relevant specific application or use thereof.
Neither TMSS Holding nor any of its affiliates or subsidiaries shall be responsible or liable for misuse of the information contained herein.

Contact code designation	B300, AC-15 (Ue = 240 V), Ie = 1.5 A conforming to IEC 60947-5-1 appendix A, R300, DC-13 (Ue = 250 V), Ie = 0.1 A conforming to IEC 60947-5-1 appendix A
Electrical durability	5000000 cycles, DC-13, 120 V, 1 W, operating rate <60 cyc/mn, load factor: 0.5 conforming to IEC 60947-5-1 appendix C, 5000000 cycles, DC-13, 24 V, 3 W, operating rate <60 cyc/mn, load factor: 0.5 conforming to IEC 60947-5-1 appendix C, 5000000 cycles, DC-13, 48 V, 2 W, operating rate <60 cyc/mn, load factor: 0.5 conforming to IEC 60947-5-1 appendix C
Electrical connection	Removable cable connector
Cable length	1 m
Cable composition	5 x 0.75 mm²
Wire insulation material	PvR
Positive opening	With
Positive opening minimum force	0.5 N
Contacts insulation form	Zb
Contacts type and composition	1 NC + 1 NO
Contact operation	Snap action
[Uimp] rated impulse withstand voltage	4 kV conforming to IEC 60664, 4 kV conforming to IEC 60947-1
[Ui] rated insulation voltage	300 V (pollution degree 3) conforming to UL 508, 400 V (pollution degree 3) conforming to IEC 60947-5-1, 300 V (pollution degree 3) conforming to CSA C22.2 No 14
Overvoltage category	Class I conforming to IEC 61140, class I conforming to NF C 20-030
Resistance across terminals	25 mOhm conforming to IEC 60255-7 category 3
Short-circuit protection	6 A cartridge fuse, type gG
Width	30 mm
Depth	16 mm
Product weight	0.23 kg

Environment

IK degree of protection	IK06 conforming to IEC 62262
IP degree of protection	IP66 conforming to IEC 60529, IP67 conforming to IEC 60529, IP68 conforming to IEC 60529
Ambient air temperature for operation	-25…70 °C
Ambient air temperature for storage	-40…70 °C
Shock resistance	25 gn for 18 ms conforming to IEC 60068-2-27
Vibration resistance	5 gn (f= 10-500 Hz) conforming to IEC 60068-2-6
Protective treatment	TC

Offer Sustainability

California proposition 65	WARNING: This product can expose you to chemicals including: Diisononyl phthalate (DINP), which is known to the State of California to cause cancer, and Di-isodecyl phthalate (DIDP), which is known to the State of California to cause birth defects or other reproductive harm. For more information go to www.P65Warnings.ca.gov

Warranty

Warranty	18 months

Packing Units

Country of origin	ID (Indonesia)
Unit type of package 1	PCE
Number of units in package 1	1
New Package 1 GTIN-13	3666916093009
Package 1 height	4 cm
Package 1 width	16 cm
Package 1 length	10.5 cm
Package 1 weight	0.23 kg
Unit type of package 2	S03
Number of units in package 2	50
New Package 2 GTIN 14	13666916093006
Package 2 height	30 cm
Package 2 width	30 cm
Package 2 length	40 cm
Package 2 weight	11.613 kg
Unit type of package 3	BAG
Number of units in package 3	1
New Package 3 GTIN 14	23666916093003
Package 3 height	4 cm
Package 3 width	16 cm
Package 3 length	10.5 cm
Package 3 weight	0.218 kg

Technical Drawings

Dimensions

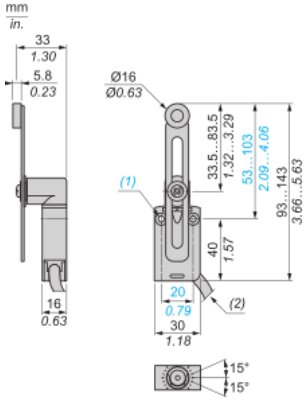

(1)
(2)

Mounting

Sweep of Connecting Cable

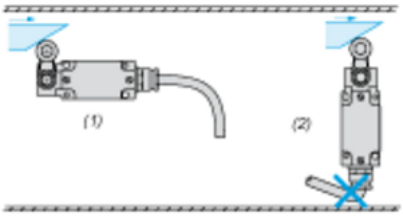

(1)
(2)

Mounting with Rotary Heads and Levers

Type of Cam

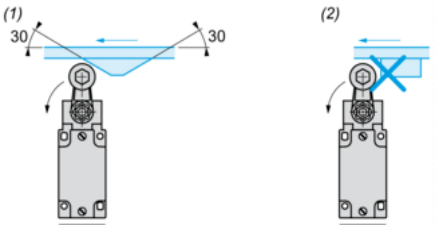

(1)
(2)

Setting-up with Head ZCE01 and ZCE09

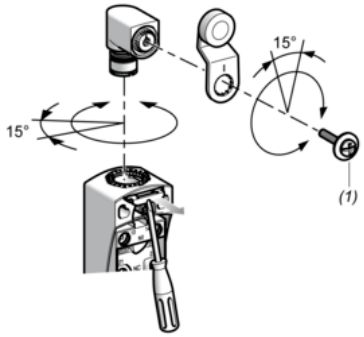

(1)

Wiring Diagram

2-pole NC + NO Snap Action

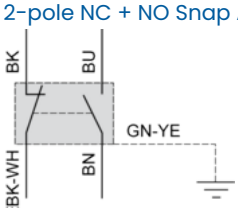

(BK)
(BK-WH)
(BU)
(BN)
(GN-YE)

Characteristics of Actuation

Switch Actuation by 30° Cam

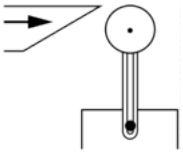

Functional Diagram

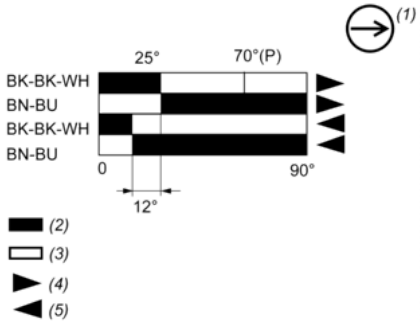

(P)
(1)
(2)
(3)
(4)
(5)
(BK)
(BK-WH)
(BU)
(BN)