

Product data sheet

XCNR2118P20

Limit switch XCNR, thermoplastic roller lever, 1NC+1NO, snap action, M20 cable entry, manual reset

Main

Range of product	Telemecanique Limit switches XC Standard
Series name	Standard format
Product or component type	Limit switch
Device short name	XCNR
Sensor design	Compact
Device presentation	Complete product
ETIM classification	ETIM 9 - EC000030 - End switch
Body type	Fixed
Head type	Rotary head
Material	Plastic
Body material	Plastic
Head material	Plastic
Fixing mode	By the body
Movement of operating head	Rotary
Type of operator	Spring return roller lever thermoplastic
Switch actuation	By 30° cam
Type of approach	Lateral approach, 2 directions
Number of poles	2
Product certifications	CCC CSA UL
Standards	CSA C22.2 No 14 IEC 60204-1 IEC 60947-5-1 UL 508
Indivisible sale quantity	20

Complementary

Mechanical durability	100000 cycles
Minimum torque for tripping	0.1 N.m
Maximum actuation speed	1.5 m/s
Reset	With

The information provided in this documentation contains general descriptions and/or technical characteristics of the performance of the products contained herein.
This documentation is not intended as a substitute for and is not to be used for determining suitability or reliability of these products for specific user applications.
It is the duty of any such user or integrator to perform the appropriate and complete risk analysis, evaluation and testing of the products with respect to the relevant specific application or use thereof.
Neither TMSS Holding nor any of its affiliates or subsidiaries shall be responsible or liable for misuse of the information contained herein.

Cable entry	1 entry tapped for M20 x 1.5 cable gland, cable outer diameter: 7-13 mm
Contact code designation	A300, AC-15 (Ue = 240 V), Ie = 3 A, Ithe = 10 A conforming to IEC 60947-5-1 appendix A, R300, DC-13 (Ue = 250 V), Ie = 0.1 A conforming to IEC 60947-5-1 appendix A
Electrical connection	Screw-clamp terminals, clamping capacity: 1 x 0.34...2 x 1.5 mm²
Positive opening	With
Positive opening minimum torque	0.15 N.m
Contacts insulation form	Zb
Contacts type and composition	1 NC + 1 NO
Terminals description ISO n°1	(13-14)NO (21-22)NC
Contact operation	Snap action
[Uimp] rated impulse withstand voltage	6 kV conforming to IEC 60664, 6 kV conforming to IEC 60947-1
[Ui] rated insulation voltage	300 V conforming to UL 508, 500 V (pollution degree 3) conforming to IEC 60947-1, 300 V conforming to CSA C22.2 No 14
Electrical shock protection class	Class II conforming to IEC 61140, class II conforming to NF C 20030
Short-circuit protection	10 A cartridge fuse, type gG

Environment

IK degree of protection	IK04 conforming to IEC 62262
IP degree of protection	IP65 conforming to IEC 60529
Ambient air temperature for operation	-25...70 °C
Ambient air temperature for storage	-40...70 °C
Shock resistance	50 gn for 11 ms conforming to IEC 60068-2-27
Vibration resistance	25 gn (f= 10-500 Hz) conforming to IEC 60068-2-6
Protective treatment	TC

Offer Sustainability

California proposition 65	WARNING: This product can expose you to chemicals including: Diisononyl phthalate (DINP), which is known to the State of California to cause cancer, and Di-isodecyl phthalate (DIDP), which is known to the State of California to cause birth defects or other reproductive harm. For more information go to www.P65Warnings.ca.gov

Warranty

Warranty	18 months

Packing Units

Country of origin	ID (Indonesia)
Unit type of package 1	PCE
Number of units in package 1	1
New Package 1 GTIN-13	3666916050392
Package 1 height	11 cm

Package 1 width	16 cm
Package 1 length	31 cm
Package 1 weight	0.1 kg
Unit type of package 2	S03
Number of units in package 2	60
New Package 2 GTIN 14	13666916050399
Package 2 height	30 cm
Package 2 width	40 cm
Package 2 length	30 cm
Package 2 weight	7.1 kg
Unit type of package 3	P06
Number of units in package 3	480
New Package 3 GTIN 14	23666916050396
Package 3 height	77 cm
Package 3 width	60 cm
Package 3 length	80 cm
Package 3 weight	88.8 kg

Technical Drawings

Dimensions

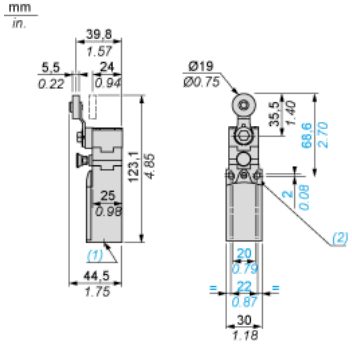

- (1) 1 tapped entry for M20 x 1.5
- (2) Ø: 2 elongated holes Ø 4.3 x 6.3 on 22 mm centres, 2 holes Ø 4.3 on 20 mm centres.

Mounting with Cable Entry

Position of Cable Gland

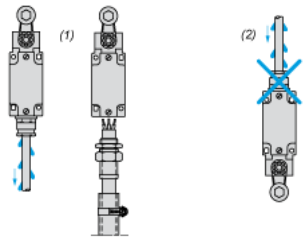

- (1) Recommended
- (2) To be avoided

Mounting with Rotary Heads and Levers

Type of Cam

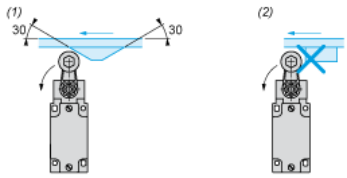

- (1) Recommended
- (2) To be avoided

Wiring Diagrams

2-pole NC + NO Snap Action



Characteristics of Actuation

Switch Actuation by 30° Cam

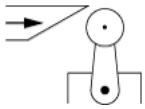

Functionnal Diagram

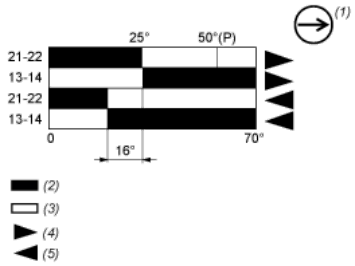

- (P) Positive opening point
- (1) NC contact with positive opening operation
- (2) Closed
- (3) Open
- (4) Tripping
- (5) Resetting