

Product data sheet

XCSRD210MDB

Safety RFID diagnostic module XCSRD, for XCSRC Daisy Chain models, Modbus RTU

Main

Range of product	Telemecanique Safety switches XCS
ETIM classification	ETIM 9 - EC002594 - Accessories/spare parts for position switches
Accessory / separate part category	Diagnostic accessories
Accessory / separate part destination	RFID safety switch
Accessory / separate part type	Diagnostic module
Product compatibility	XCSRC...2M12
Indivisible sale quantity	1

Complementary

[Ue] rated operational voltage	24 V DC (- 20...10 %)SELV or PELV
Local signalling	Green, orange and red 2 LEDs
Product weight	0.1 kg

Offer Sustainability

California proposition 65	WARNING: This product can expose you to chemicals including: Diisononyl phthalate (DINP), which is known to the State of California to cause cancer, and Di-isodecyl phthalate (DIDP), which is known to the State of California to cause birth defects or other reproductive harm. For more information go to www.P65Warnings.ca.gov

Warranty

Warranty	18 months

Packing Units

Country of origin	FR (France)
Unit type of package 1	PCE
Number of units in package 1	1
New Package 1 GTIN-13	3666916039373
Package 1 height	6.5 cm
Package 1 width	4.3 cm
Package 1 length	9.5 cm
Package 1 weight	0.117 kg

The information provided in this documentation contains general descriptions and/or technical characteristics of the performance of the products contained herein.
This documentation is not intended as a substitute for and is not to be used for determining suitability or reliability of these products for specific user applications.
It is the duty of any such user or integrator to perform the appropriate and complete risk analysis, evaluation and testing of the products with respect to the relevant specific application or use thereof.
Neither TMSS Holding nor any of its affiliates or subsidiaries shall be responsible or liable for misuse of the information contained herein.

Unit type of package 2	S01
Number of units in package 2	12
New Package 2 GTIN 14	13666916039370
Package 2 height	15 cm
Package 2 width	15 cm
Package 2 length	40 cm
Package 2 weight	1.591 kg
Unit type of package 3	S02
Number of units in package 3	10
New Package 3 GTIN 14	23666916039377
Package 3 height	15 cm
Package 3 width	30 cm
Package 3 length	40 cm

Technical Drawings

Dimensions

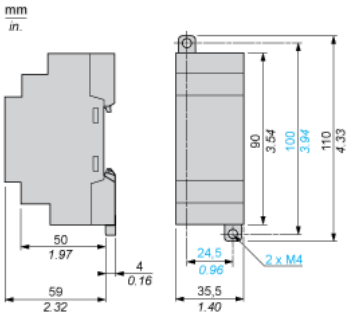

Connections

Wiring Diagram: Series Connection with Serial Diagnosis

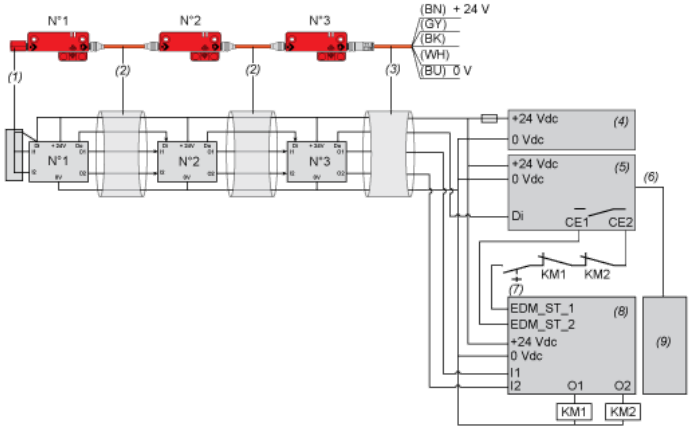

- Di: Diagnostic signal input
- Do: Diagnostic signal output
- I1: Safety Input 1
- I2: Safety Input 2
- O1: Safety Output 1
- O2: Safety Output 2
- CE1 & CE2: Connections for Chain Error contact (used as external Start Condition - ESC)
- BN: Brown
- GY: Grey
- BK: Black
- WH: White
- BU: Blue
- (1) Loopback device
- (2) M12/M12 female jumpers
- (3) Pre-wired female connector
- (4) SELV/PELV Power Supply
- (5) Diagnostic module (option)
- (6) Cable for Modbus RTU serial link
- (7) Start
- (8) Safety relay
- (9) HMI or PLC

Example of connection to a safety relay and the diagnostic module

NOTE: