

Product data sheet

XMLB035A2S11

Pressure switch, XMLB, pressure range 35 bar, adjustable scale, 1CO, 2 thresholds

Main

Range of product	Telemecanique Pressure sensors XM
Pressure sensor type	Electromechanical pressure sensor
Product or component type	Electromechanical pressure sensor
Device short name	XMLB
Product specific application	Not applicable
ETIM classification	ETIM 9 - EC000243 - Pressure switch
Enclosure material	Zinc alloy
Materials in contact with fluid	Brass nitrile zinc alloy
Pressure switch type of operation	Regulation between 2 thresholds
Operating position	Any position
Pressure sensor size	35 Bar
Maximum permissible accidental pressure	80 Bar
Maximum permissible pressure - per cycle	45 Bar
Destruction pressure	160 Bar
Pressure actuator	Diaphragm
Possible differential maximum at high setting	20 Bar
Controlled fluid	Air (0-70 °C), fresh water (0-70 °C), hydraulic oil (0-70 °C)
Fluid connection type	G 1/4 (female) conforming to ISO 228
Local display	With
AWG gauge	AWG 20...AWG 14
Scale type	Adjustable differential
Setting	External
Product certifications	BV CCC CSA LROS (Lloyds register of shipping) UL
Standards	CE CSA C22.2 No 14

The information provided in this documentation contains general descriptions and/or technical characteristics of the performance of the products contained herein.
This documentation is not intended as a substitute for and is not to be used for determining suitability or reliability of these products for specific user applications.
It is the duty of any such user or integrator to perform the appropriate and complete risk analysis, evaluation and testing of the products with respect to the relevant specific application or use thereof.
Neither TMSS Holding nor any of its affiliates or subsidiaries shall be responsible or liable for misuse of the information contained herein.

	IEC 60947-5-1 UL 508
Indivisible sale quantity	1

Complementary

Mechanical durability	5000000 cycles
Cable entry	Cable gland 9-13 mm
Repeat accuracy	2 %
Electrical connection	Screw-clamps terminals, 1 x 0.5...2 x 2.5 mm², 1 connector Pg 13
Electrical circuit type	Control circuit
Contacts type and composition	1 C/O
Contacts material	Silver contacts
Terminals description ISO n°1	(13-14-11-12)OF
Auxiliary contacts operation	Snap action
Operating rate	120 cyc/mn
[Uimp] rated impulse withstand voltage	6 kV conforming to IEC 60947-1
[Ui] rated insulation voltage	300 V conforming to UL 508, 500 V conforming to IEC 60947-1, 300 V conforming to CSA C22.2 No 14
[In] rated current	3 A, B300, AC-15 (Ue = 120 V) conforming to IEC 60947-5-1, 1.5 A, B300, AC-15 (Ue = 240 V) conforming to IEC 60947-5-1, 0.1 A, R300, DC-13 (Ue = 250 V) conforming to IEC 60947-5-1
Resistance across terminals	25 mOhm conforming to IEC 255-7 category 3, 25 mOhm conforming to NF C 93-050 method A
Electrical shock protection class	Class I conforming to IEC 1140, class I conforming to IEC 536, class I conforming to NF C 20-030
Short-circuit protection	10 A cartridge fuse, type gG (gI)
Adjustable range of switching point on rising pressure	3.5000...35.0000 bar
Adjustable range of switching point on falling pressure	1.8000...32.4500 bar
Terminal block type	4 terminals
Possible differential minimum at low setting	1.7 bar (- 0.5 bar, + 0.7 bar)
Possible differential minimum at high setting	2.55 bar (- 0.5 bar, + 0.7 bar)
Height	113 mm
Width	35 mm
Depth	75 mm
Product weight	0.715 kg

Environment

IP degree of protection	IP66 conforming to IEC 60529
Ambient air temperature for operation	-25...70 °C
Ambient air temperature for storage	-40...70 °C
Shock resistance	50 gn conforming to IEC 60068-2-27

Vibration resistance	4 gn conforming to IEC 60068-2-6 (f = 30-500 Hz)
Protective treatment	TC standard version

Offer Sustainability

California proposition 65	WARNING: This product can expose you to chemicals including: Diisononyl phthalate (DINP), which is known to the State of California to cause cancer, and Di-isodecyl phthalate (DIDP), which is known to the State of California to cause birth defects or other reproductive harm. For more information go to www.P65Warnings.ca.gov

Warranty

Warranty	18 months

Packing Units

Country of origin	CZ (Czech Republic) MA (Morocco)
Unit type of package 1	PCE
Number of units in package 1	1
New Package 1 GTIN-13	3666916025147
Package 1 height	4 cm
Package 1 width	12.2 cm
Package 1 length	8.5 cm
Package 1 weight	0.715 kg
Unit type of package 2	S02
Number of units in package 2	13
New Package 2 GTIN 14	13666916025144
Package 2 height	15 cm
Package 2 width	30 cm
Package 2 length	40 cm
Package 2 weight	9.929 kg
Unit type of package 3	CAR
Number of units in package 3	1
New Package 3 GTIN 14	23666916025141
Package 3 height	8.5 cm
Package 3 width	4 cm
Package 3 length	12.2 cm
Package 3 weight	0.77 kg

Technical Drawings

Dimensions

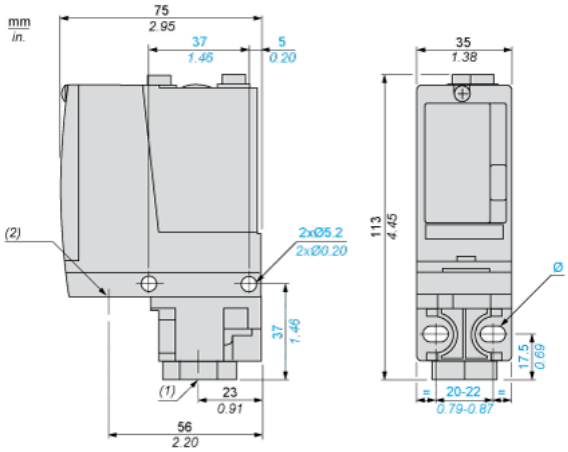

- (1) 1 fluid entry, tapped G1/4 (BSP female)
- (2) 1 electrical connections entry, tapped Pg 13.5
- Ø : 2 elongated holes Ø 5.2 x 6.7

Wiring Diagram

Terminal Model

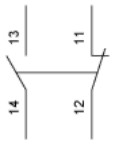

Operating Curves

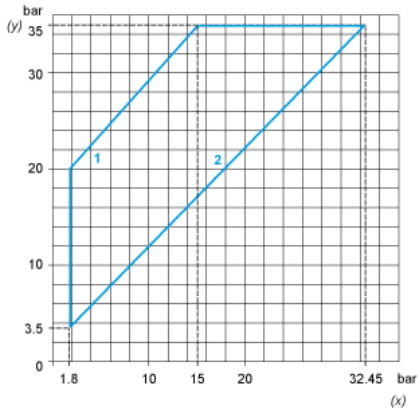

- (y) Rising pressure
- (x) Falling pressure
- 1 : Maximum differential
- 2 : Minimum differential

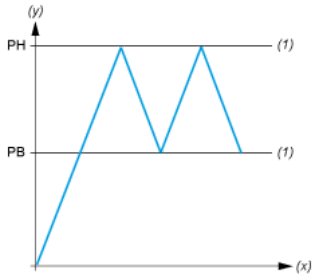

- (y) Rising pressure
- (x) Falling pressure
- 1 : Maximum differential
- 2 : Minimum differential
- (y) Pressure
- (x) Time
- (1) Adjustable value
- PH : High point
- PB : Below point