

Product data sheet

XMLR016G1P25

Pressure sensor, XMLR, pressure range 16 bar, output 4-20 mA + PNP, G1/4A female, M12 connector, 24 VDC, with display

Main

Range of product	Telemecanique Pressure sensors XM
Pressure sensor type	Pressure transmitter
Product or component type	Electronic pressure sensors
Device short name	XMLR
ETIM classification	ETIM 9 - EC000243 - Pressure switch
Front material	Polyester
Housing material	316L stainless steel polyacrylamide
Materials in contact with fluid	316L stainless steel ceramic fluorocarbon FKM (Viton)
Pressure switch type of operation	Pressure transmitter with 1 switching output
Pressure sensor size	232 PSI
Maximum permissible accidental pressure	900 PSI
Destruction pressure	900 PSI
Controlled fluid	Fresh water (0-80 °C), air (-20-80 °C), hydraulic oil (-20-80 °C), refrigeration fluid (-20-80 °C)
Fluid connection type	G 1/4 (female) conforming to DIN 3852-Y
Display type	4 digits 7 segments
Scale type	Fixed differential
Product certifications	cULus
Marking	CE
Standards	IEC 61326-2-3 UL 61010-1
Indivisible sale quantity	1

Complementary

Mechanical durability	10000000 cycles
Repeat accuracy	<= 0.2 % of the measuring range
Electrical connection	Male connector M12, 4 pins
Contacts type and composition	NO/NC programmable
[Us] rated supply voltage	24 V DC SELV (voltage limits: 17-33 V)

The information provided in this documentation contains general descriptions and/or technical characteristics of the performance of the products contained herein.
This documentation is not intended as a substitute for and is not to be used for determining suitability or reliability of these products for specific user applications.
It is the duty of any such user or integrator to perform the appropriate and complete risk analysis, evaluation and testing of the products with respect to the relevant specific application or use thereof.
Neither TMSS Holding nor any of its affiliates or subsidiaries shall be responsible or liable for misuse of the information contained herein.

[Uimp] rated impulse withstand voltage	0.5 kV DC
Maximum switching current	250 mA
Voltage drop	2 V
Current consumption	<= 50 mA
Protection type	Overload protection overvoltage protection reverse polarity short-circuit protection
Local signalling	1 LED (yellow) for light ON when switch is actuated
Type of output signal	Analogue + discrete
Adjustable range of switching point on rising pressure	1.2824...15.9958 bar
Adjustable range of switching point on falling pressure	0.7998...15.5132 bar
Analogue output function	4...20 mA
Analogue output function	4...20 mA
Discrete output type	Solid state PNP, NO/NC programmable
Minimum differential travel	48 kPa
Response time on output	<= 10 ms for analog output, <= 5 ms for discrete output
Linearity error	<= 0.5 % of the measuring range
Delay first up	300 ms
Operating position	Any position, but disposals can falsified the measurement in case of upside down mounting
Measurement accuracy	<= 0.6 % of the measuring range
Accuracy	<= 1 % of the measuring range
Drift of the sensitivity	+/- 0,03 % of measuring range/°C
Drift of the zero point	+/- 0,01 % of measuring range/°C
Display accuracy	<= 1 % of the measuring range
Time delay range	0...50 s in steps of 1 second
Display response time type	Fast 50 ms, normal 200 ms, slow 600 ms
Hysteresis	<= 0.2 % of the measuring range
Height	93 mm
Width	41 mm
Depth	42 mm
Product weight	0.19 kg

Environment

IP degree of protection	IP65 conforming to IEC 60529, IP67 conforming to IEC 60529
Ambient air temperature for operation	-20...80 °C
Ambient air temperature for storage	-40...80 °C
Shock resistance	50 gn conforming to IEC 60068-2-27

Vibration resistance	20 gn (f= 10-2000 Hz) conforming to IEC 60068-2-6
Electromagnetic compatibility	Susceptibility to electromagnetic fields: 10 V/m 80...2000 MHz conforming to IEC 61000-4-3, immunity to conducted RF disturbances: 10 V 0.15...80 MHz conforming to IEC 61000-4-6, surge immunity test: 1 kV conforming to IEC 61000-4-5, electrical fast transient/burst immunity test: 2 kV conforming to IEC 61000-4-4, electrostatic discharge immunity test: 8 kV air, 4 kV contact conforming to IEC 61000-4-2

Offer Sustainability

California proposition 65	WARNING: This product can expose you to chemicals including: Diisononyl phthalate (DINP), which is known to the State of California to cause cancer, and Di-isodecyl phthalate (DIDP), which is known to the State of California to cause birth defects or other reproductive harm. For more information go to www.P65Warnings.ca.gov

Warranty

Warranty	18 months

Packing Units

Country of origin	CH (Switzerland)
Unit type of package 1	PCE
Number of units in package 1	1
New Package 1 GTIN-13	3666916020913
Package 1 height	6.5 cm
Package 1 width	7.5 cm
Package 1 length	12.7 cm
Package 1 weight	0.19 kg
Unit type of package 2	S02
Number of units in package 2	12
New Package 2 GTIN 14	13666916020910
Package 2 height	15 cm
Package 2 width	30 cm
Package 2 length	40 cm
Package 2 weight	181 kg
Unit type of package 3	CAR
Number of units in package 3	1
New Package 3 GTIN 14	23666916020917
Package 3 height	12.7 cm
Package 3 width	6.5 cm
Package 3 length	7.5 cm
Package 3 weight	0.181 kg

Technical Drawings

Dimensions

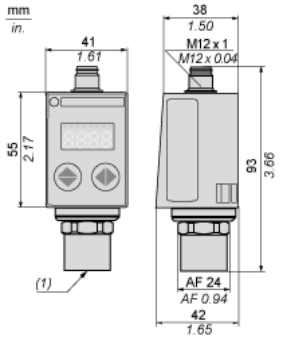

- (1) Fluid entry: G 1/4 A female

Connections and Schema

Connector Wiring

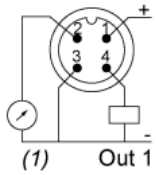

- (1) I Out or V Out

Analogue Output Description

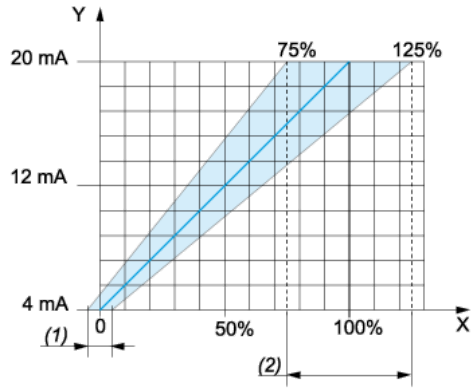

- X : Pressure
- Y : Analogue output signal
- (1) An offset of +/-5% of nominal pressure can be compensated (with Configuration menu. : Offset Compensation)
- (2) The analogue curve can be adjusted from -25% to +25% of nominal pressure (with Configuration menu. : analogue end point).

Switching Output Description. Hysteresis Mode

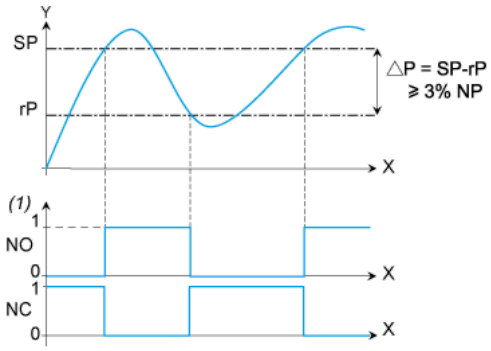

- X : Time
- Y : Pressure
- (1) Output
- NP : Nominal Pressure
- SP : Set point (adjustable from 8 % to 100 % NP)
- rP : Reset point (adjustable from 5 % to 97 % NP)

The hysteresis switching mode is typically used for the “pumping and/or emptying applications”.

Switching Output Description. Window Mode

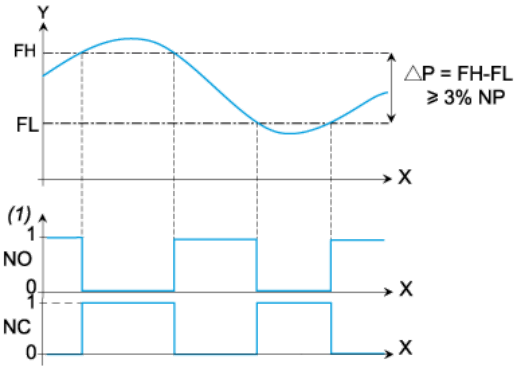

- X : Time
- Y : Pressure
- (1) Output
- NP : Nominal pressure
- FH : High switching point (adjustable from 8 % to 100 % NP)
- FL : Low switching point (adjustable from 5 % to 97 % NP)

The window switching mode is typically used for the “pressure regulation applications”

Switching Output Description. Time Delay

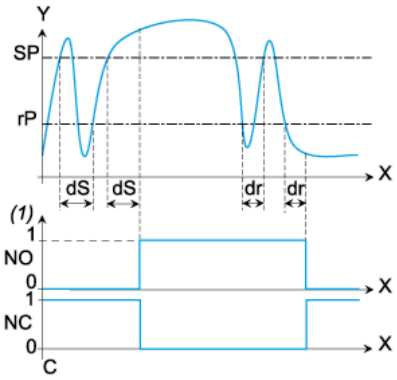

- X : Time
- Y : Pressure
- (1) Output
- SP : Set point
- rP : Reset point
- dS : Time delay on the set point
- dr : Time delay on the reset point

The Time Delay is typically used to filter out the fast pressure transients.
The output only switches after a time “dS” and “dr” adjustable from 0 to 50 seconds.