

Product data sheet

XMPB06B2131

Pressure switch, XMP, pressure range 6 bar, adjustable scale, 2NC, G 1/4 female, 2 thresholds

Main

Range of product	Telemecanique Pressure sensors XM
Pressure sensor type	Electromechanical pressure sensor
Pressure sensor name	XMP
Product specific application	Not applicable
ETIM classification	ETIM 9 - EC000243 - Pressure switch
Enclosure material	PA impregnated with fibreglass
Materials in contact with fluid	Canvas covered nitrile chromated zinc alloy
Pressure switch type of operation	Regulation between 2 thresholds
Operating position	Any position
Pressure sensor size	6 Bar
Destruction pressure	30 Bar
Pressure actuator	Diaphragm
Possible differential minimum at low setting	0.8 Bar
Possible differential maximum at high setting	4.2 Bar
Possible differential minimum at high setting	1.2 Bar
Controlled fluid	Air (0-70 °C), fresh water (0-70 °C), sea water (0-70 °C)
Fluid connection type	G 1/4 (female) conforming to ISO 228
Local display	Without
Scale type	Adjustable differential
Setting	Nut
Product certifications	EAC
Standards	CE IEC 60947-4-1
Range compatibility	TE PRESSURE SSRS XM
Indivisible sale quantity	1
Sale per indivisible quantity	1

The information provided in this documentation contains general descriptions and/or technical characteristics of the performance of the products contained herein.
This documentation is not intended as a substitute for and is not to be used for determining suitability or reliability of these products for specific user applications.
It is the duty of any such user or integrator to perform the appropriate and complete risk analysis, evaluation and testing of the products with respect to the relevant specific application or use thereof.
Neither TMSS Holding nor any of its affiliates or subsidiaries shall be responsible or liable for misuse of the information contained herein.

Complementary

Mechanical durability	1000000 cycles
Cable entry	2 entries tapped for Pg 13.5 cable gland conforming to NF C 68-300
Repeat accuracy	3.5 %
Electrical durability	1000000 cycles 1.5 kW, operating rate <10 cyc/mn, load factor: 0.4 , 400 V AC 3 phases, 500000 cycles 3 kW, operating rate <10 cyc/mn, load factor: 0.4 , 400 V AC 3 phases, 600000 cycles 1.5 kW, operating rate <10 cyc/mn, load factor: 0.4 , 230 V AC 3 phases, 700000 cycles 2.2 kW, operating rate <10 cyc/mn, load factor: 0.4 , 400 V AC 3 phases
Electrical connection	Screw-clamp terminals, clamping capacity: minimum : 2 x 4 mm²
Electrical circuit type	Power circuit
Contacts type and composition	2 NC snap action
Terminals description ISO n°1	(1-2)NC (3-4)NC
Operating rate	10 c.p.m
[Uimp] rated impulse withstand voltage	6 kV conforming to IEC 60947-1
[Ui] rated insulation voltage	500 V conforming to IEC 60947-1
Resistance across terminals	25 MOhm conforming to IEC 60255-7 category 3, 25 MOhm conforming to NF C 93-050 method A
Electrical shock protection class	Class I conforming to IEC 60536
Control type	RESET knob
Adjustable range of switching point on falling pressure	0.2000...4.8000 bar
Terminal block type	4 terminals
Type of decompression valve	Without
Height	125 mm
Width	57 mm
Depth	98 mm
Product weight	0.43 kg

Environment

IP degree of protection	IP54 conforming to IEC 60529
Ambient air temperature for operation	-25...70 °C
Ambient air temperature for storage	-40...70 °C
Shock resistance	50 gn conforming to IEC 60068-2-27
Vibration resistance	3 gn conforming to IEC 60068-2-6 (f = 10-500 Hz)

Offer Sustainability

California proposition 65	WARNING: This product can expose you to chemicals including: Diisononyl phthalate (DINP), which is known to the State of California to cause cancer, and Di-isodecyl phthalate (DIDP), which is known to the State of California to cause birth defects or other reproductive harm. For more information go to www.P65Warnings.ca.gov

Warranty

Warranty	18 months

Packing Units

Country of origin	CZ (Czech Republic) MA (Morocco)
Unit type of package 1	PCE
Number of units in package 1	1
New Package 1 GTIN-13	3666916024737
Package 1 height	6.2 cm
Package 1 width	11.5 cm
Package 1 length	17 cm
Package 1 weight	0.43 kg
Unit type of package 2	S02
Number of units in package 2	12
New Package 2 GTIN 14	13666916024734
Package 2 height	15 cm
Package 2 width	30 cm
Package 2 length	40 cm
Package 2 weight	473 kg
Unit type of package 3	S03
Number of units in package 3	20
New Package 3 GTIN 14	23666916024731
Package 3 height	30 cm
Package 3 width	30 cm
Package 3 length	40 cm
Package 3 weight	10.173 kg

Technical Drawings

Dimensions

Without Decompression Valve

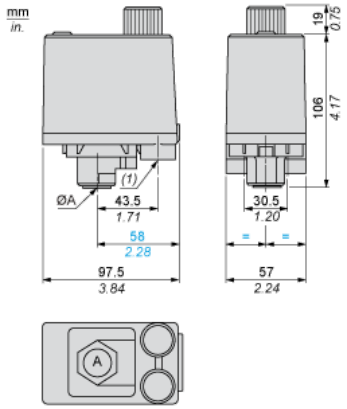

- ØA = G 1/4
- (1) 2 tapped entries for Pg 13.5

Minimum Mounting Clearance

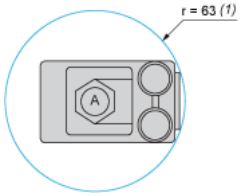

- ØA = G1/4
- (1) Minimum clearance zone for screwing-on pressure switch at point A

Wiring Diagram

Terminal Connections

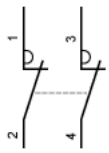

Curves

Operating Curves

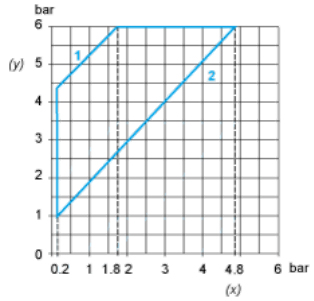

- (y) Rising pressure
- (x) Falling pressure
- 1 : Maximum differential
- 2 : Minimum differential

Curves

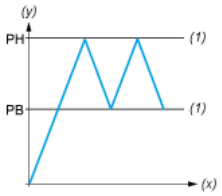

- (y) Rising pressure
- (x) Falling pressure
- 1 : Maximum differential
- 2 : Minimum differential
- (y) Pressure
- (x) Time
- (1) Adjustable value
- PH : High point
- PB : Below point