

# Product data sheet

# XS112B3PAL2

Inductive sensor, XS1, M12, brass, Sn 4 mm, PNP, NO, cable 2 m, L37 mm, 12...24 VDC, flush, 3 wires

## Main

| | |
|---|---|
| Range of product | Telemecanique Inductive proximity sensors XS |
| Series name | General purpose |
| Sensor name | XS1 |
| Sensor type | Inductive proximity sensor |
| Sensor design | Cylindrical M12 |
| Device application | Mobile equipment |
| ETIM classification | ETIM 9 - EC002714 - Inductive proximity switch |
| Body type | Fixed |
| Material | Metal |
| Front material | PPS |
| Enclosure material | Nickel plated brass |
| [Sn] nominal sensing distance | 4 mm |
| Wiring technique | 3-wire |
| Detector flush mounting acceptance | Flush mountable |
| Delay response | 0.2 ms |
| Thread type | M12 x 1 |
| Product certifications | CSA<br>E2<br>UL |
| Marking | CE |
| Indivisible sale quantity | 1 |

## Complementary

| | |
|---|---|
| Sensing range | > 2.5...4 mm |
| Electrical connection | Cable |
| Cable length | 2 m |
| Cable composition | 3 x 0.34 mm² |
| Wire insulation material | PVC |
| Supply voltage limits | 10-36 V DC |
| [Us] rated supply voltage | 12...24 V DC with reverse polarity protection |

The information provided in this documentation contains general descriptions and/or technical characteristics of the performance of the products contained herein.
This documentation is not intended as a substitute for and is not to be used for determining suitability or reliability of these products for specific user applications.
It is the duty of any such user or integrator to perform the appropriate and complete risk analysis, evaluation and testing of the products with respect to the relevant specific application or use thereof.
Neither TMSS Holding nor any of its affiliates or subsidiaries shall be responsible or liable for misuse of the information contained herein.

| | |
|---|---|
| Switching capacity in mA | <= 200 mA with overload and short-circuit protection |
| Voltage drop | <2 V (closed) |
| Current consumption | <= 10 mA no-load |
| Status LED | Output state: 1 LED (yellow) |
| Output circuit type | DC |
| Type of output signal | Discrete |
| Detection face | Frontal |
| Discrete output type | PNP |
| Discrete output function | 1 NO |
| Switching frequency | <= 2500 Hz |
| Differential travel | 1...15 % of Sr |
| Delay first up | 10 ms |
| Delay recovery | 0.2 ms |
| Threaded length | 25 mm |
| Length | 37 mm |
| Size | 37 mm |
| Product weight | 0.09 kg |

## Environment

| | |
|---|---|
| IP degree of protection | IP65 conforming to IEC 60529, IP67 conforming to IEC 60529 |
| Ambient air temperature for operation | -25...70 °C |
| Ambient air temperature for storage | -40...85 °C |
| Shock resistance | 50 gn for 11 ms conforming to IEC 60068-2-27 |
| Vibration resistance | 25 gn amplitude = +/- 2 mm (f = 10-55 Hz) conforming to IEC 60068-2-6 |

## Offer Sustainability

| | |
|---|---|
| California proposition 65 | WARNING: This product can expose you to chemicals including: Diisononyl phthalate (DINP), which is known to the State of California to cause cancer, and Di-isodecyl phthalate (DIDP), which is known to the State of California to cause birth defects or other reproductive harm. For more information go to www.P65Warnings.ca.gov |

## Warranty

| | |
|---|---|
| Warranty | 18 months |

## Packing Units

| | |
|---|---|
| Country of origin | ID (Indonesia) |
| Unit type of package 1 | PCE |
| Number of units in package 1 | 1 |
| New Package 1 GTIN-13 | 3666916019191 |
| Package 1 height | 13.2 cm |

| | |
|---|---|
| Package 1 width | 4.1 cm |
| Package 1 length | 9.5 cm |
| Package 1 weight | 0.074 kg |
| Unit type of package 2 | S02 |
| Number of units in package 2 | 22 |
| New Package 2 GTIN 14 | 13666916019198 |
| Package 2 height | 15 cm |
| Package 2 width | 30 cm |
| Package 2 length | 40 cm |
| Package 2 weight | 2.66 kg |
| Unit type of package 3 | CAR |
| Number of units in package 3 | 1 |
| New Package 3 GTIN 14 | 23666916019195 |
| Package 3 height | 9.5 cm |
| Package 3 width | 13.2 cm |
| Package 3 length | 4.1 cm |
| Package 3 weight | 0.09 kg |

## Technical Drawings

### Dimensions

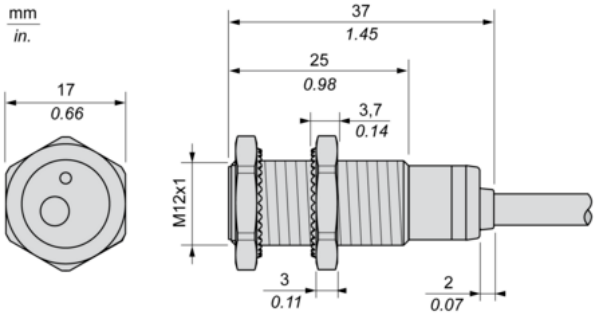

## Minimum Mounting Distances

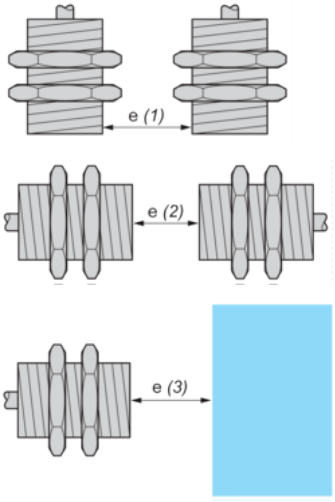


Side by side
e (1) ≥
Face to face
e (2) ≥
Facing a metal object
e (3) ≥

## Mounting

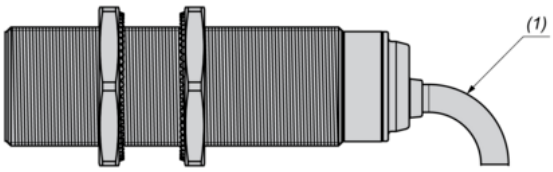


(1)

## Wiring Schemes

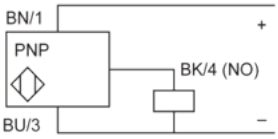


PNP
BU :
BN :
BK :