

Product data sheet

XS4P18AB120

Inductive sensor, XS4, M18, Sn 8 mm, cable 2 m, L41 mm, 12...24 VDC

Main

Range of product	Telemecanique Inductive proximity sensors XS
Series name	Application
Sensor name	XS4
Sensor type	Inductive proximity sensor
Sensor design	Cylindrical M18
ETIM classification	ETIM 9 - EC002714 - Inductive proximity switch
Body type	Fixed
Material	Plastic
Front material	PPS
Enclosure material	PBT
[Sn] nominal sensing distance	8 mm
Wiring technique	2-wire
Detector flush mounting acceptance	Non flush mountable
Thread type	M18 x 1
Product certifications	CSA UL
Marking	CE
Indivisible sale quantity	1

Complementary

Sensing range	> 4...8 mm
Repeat accuracy	<= 3% of Sr
Electrical connection	Cable
Cable length	2 m
Cable composition	3 x 0.34 mm²
Wire insulation material	PVC
Supply voltage limits	10-38 V DC
[Us] rated supply voltage	12...24 V DC
Current consumption	4 mA no-load

The information provided in this documentation contains general descriptions and/or technical characteristics of the performance of the products contained herein.
This documentation is not intended as a substitute for and is not to be used for determining suitability or reliability of these products for specific user applications.
It is the duty of any such user or integrator to perform the appropriate and complete risk analysis, evaluation and testing of the products with respect to the relevant specific application or use thereof.
Neither TMSS Holding nor any of its affiliates or subsidiaries shall be responsible or liable for misuse of the information contained herein.

Output circuit type	DC
Type of output signal	Analogue
Output current drift	10 %
Detection face	Frontal
Analogue output range	4...20 mA
Switching frequency	<= 500 Hz
Linearity error	+/- 2 mA
Threaded length	26 mm
Height	18 mm
Length	41 mm
Size	41 mm
Product weight	0.08 kg

Environment

IP degree of protection	IP67 conforming to IEC 60529
Ambient air temperature for operation	-25...70 °C

Offer Sustainability

California proposition 65	WARNING: This product can expose you to chemicals including: Diisononyl phthalate (DINP), which is known to the State of California to cause cancer, and Di-isodecyl phthalate (DIDP), which is known to the State of California to cause birth defects or other reproductive harm. For more information go to www.P65Warnings.ca.gov

Warranty

Warranty	18 months

Packing Units

Country of origin	FR (France)
Unit type of package 1	PCE
Number of units in package 1	1
New Package 1 GTIN-13	3666916015124
Package 1 height	4.1 cm
Package 1 width	9.5 cm
Package 1 length	13 cm
Package 1 weight	0.08 kg
Unit type of package 2	S03
Number of units in package 2	44
New Package 2 GTIN 14	13666916015121
Package 2 height	30 cm
Package 2 width	30 cm
Package 2 length	40 cm

Package 2 weight	4.074 kg
Unit type of package 3	CAR
Number of units in package 3	1
New Package 3 GTIN 14	23666916015128
Package 3 height	13 cm
Package 3 width	4.1 cm
Package 3 length	9.5 cm
Package 3 weight	0.097 kg

Technical Drawings

Dimensions

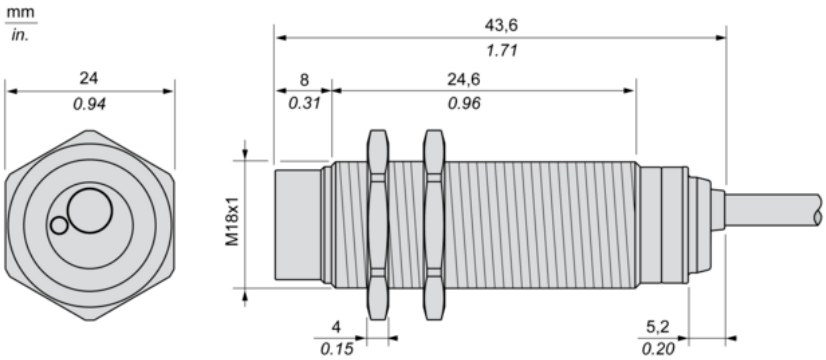

Minimum Mounting Distances

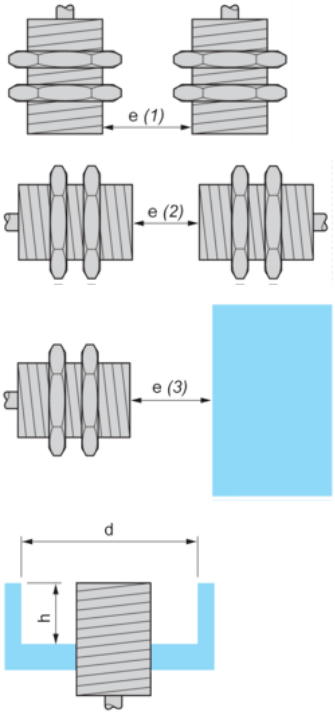

Side by side
e (1) ≥
Face to face
e (2) ≥
Facing a metal object
e (3) ≥
Mounted in a metal support
d ≥
h ≥

Mounting

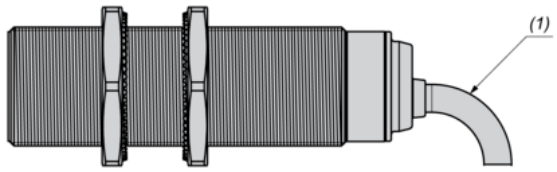

(1)

Wiring Schemes

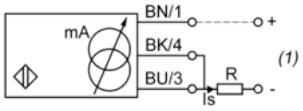

2-Wire connection
(1)
BN :
BK :
BU :

Output Curves

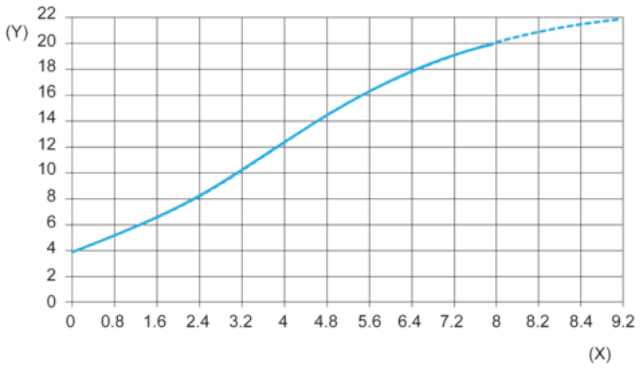

(Y)
(X)