

Product data sheet

XS630B1NBL2

Inductive sensor, XS6, M30, brass, Sn 15 mm, NPN, NC, cable 2 m, L62 mm, 12...48 VDC

Main

Range of product	Telemecanique Inductive proximity sensors XS
Series name	General purpose
Sensor name	XS6
Sensor type	Inductive proximity sensor
Sensor design	Cylindrical M30
Device application	Mobile equipment
ETIM classification	ETIM 9 - EC002714 - Inductive proximity switch
Body type	Fixed
Material	Metal
Front material	PPS
Enclosure material	Nickel plated brass
[Sn] nominal sensing distance	15 mm
Wiring technique	3-wire
Detector flush mounting acceptance	Flush mountable
Delay response	0.6 ms
Thread type	M30 x 1.5
Product certifications	CSA E2 UL
Marking	CE
Indivisible sale quantity	1

Complementary

Sensing range	8...15 mm
Electrical connection	Cable
Cable length	2 m
Cable composition	3 x 0.34 mm²
Wire insulation material	PVC
Supply voltage limits	10-58 V DC
[Us] rated supply voltage	12...48 V DC with reverse polarity protection

The information provided in this documentation contains general descriptions and/or technical characteristics of the performance of the products contained herein.
This documentation is not intended as a substitute for and is not to be used for determining suitability or reliability of these products for specific user applications.
It is the duty of any such user or integrator to perform the appropriate and complete risk analysis, evaluation and testing of the products with respect to the relevant specific application or use thereof.
Neither TMSS Holding nor any of its affiliates or subsidiaries shall be responsible or liable for misuse of the information contained herein.

Switching capacity in mA	<= 200 mA DC with overload and short-circuit protection
Voltage drop	<2 V (closed)
Current consumption	<= 10 mA no-load
Status LED	Output state: 1 LED (yellow)
Output circuit type	DC
Type of output signal	Discrete
Detection face	Frontal
Discrete output type	NPN
Discrete output function	1 NC
Switching frequency	<= 500 Hz
Differential travel	1...15 % of Sr
Delay first up	10 ms
Delay recovery	1.4 ms
Threaded length	52 mm
Length	62 mm
Size	62 mm
Product weight	0.21 kg

Environment

IP degree of protection	IP68 double insulation conforming to IEC 60529, IP69K conforming to DIN 40050
Ambient air temperature for operation	-25...70 °C
Ambient air temperature for storage	-40...85 °C
Shock resistance	50 gn for 11 ms conforming to IEC 60068-2-27
Vibration resistance	25 gn amplitude = +/- 2 mm (f = 10-55 Hz) conforming to IEC 60068-2-6

Offer Sustainability

California proposition 65	WARNING: This product can expose you to chemicals including: Diisononyl phthalate (DINP), which is known to the State of California to cause cancer, and Di-isodecyl phthalate (DIDP), which is known to the State of California to cause birth defects or other reproductive harm. For more information go to www.P65Warnings.ca.gov

Warranty

Warranty	18 months

Packing Units

Country of origin	FR (France)
Unit type of package 1	PCE
Number of units in package 1	1
New Package 1 GTIN-13	3666916011881
Package 1 height	13 cm

Package 1 width	4.1 cm
Package 1 length	9.5 cm
Package 1 weight	0.205 kg
Unit type of package 2	S02
Number of units in package 2	22
New Package 2 GTIN 14	13666916011888
Package 2 height	15 cm
Package 2 width	30 cm
Package 2 length	40 cm
Package 2 weight	4.589 kg
Unit type of package 3	CAR
Number of units in package 3	1
New Package 3 GTIN 14	23666916011885
Package 3 height	9.5 cm
Package 3 width	13 cm
Package 3 length	4.1 cm
Package 3 weight	0.215 kg

Technical Drawings

Dimensions

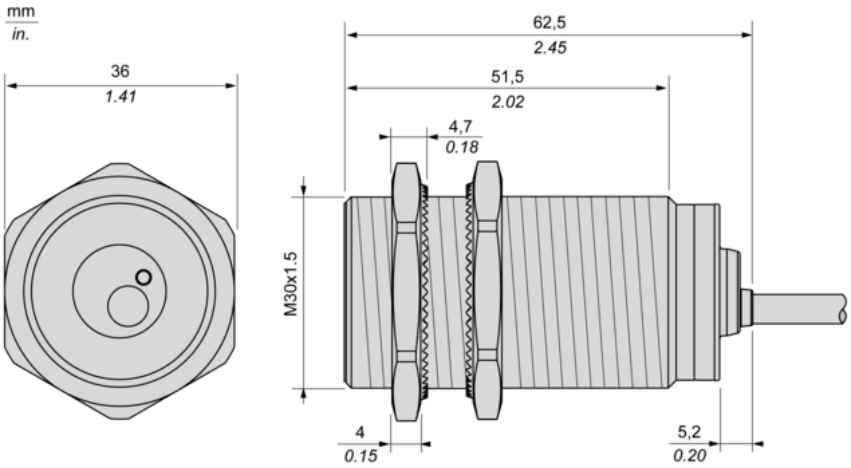

Minimum Mounting Distances

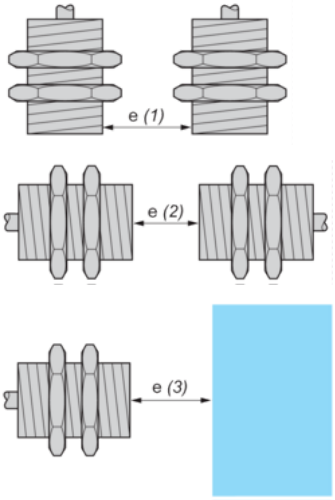

Side by side
e (1) ≥
Face to face
e (2) ≥
Facing a metal object
e (3) ≥

Wiring Schemes

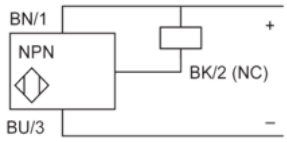

NPN
BU :
BN :
BK :