

Product data sheet

XS630B4MAL2

Inductive sensor, XS6, M30, brass, Sn 22 mm, NO, cable 2 m, L66 mm, 24...240 VAC/DC, non-flush, 2 wires

Main

Range of product	Telemecanique Inductive proximity sensors XS
Series name	General purpose
Sensor name	XS6
Sensor type	Inductive proximity sensor
Sensor design	Cylindrical M30
ETIM classification	ETIM 9 - EC002714 - Inductive proximity switch
Body type	Fixed
Material	Metal
Front material	PPS
Enclosure material	Nickel plated brass
[Sn] nominal sensing distance	22 mm
Wiring technique	2-wire
Detector flush mounting acceptance	Non flush mountable
Delay response	0.5 ms
Thread type	M30 x 1.5
Product certifications	CSA UL
Marking	CE
Indivisible sale quantity	1

Complementary

Sensing range	> 15...40 mm
Electrical connection	Cable
Cable length	2 m
Cable composition	2 x 0.34 mm²
Wire insulation material	PVC
Supply voltage limits	20-264 V AC/DC
[Us] rated supply voltage	24...240 V AC/DC 50/60 Hz
Switching capacity in mA	5...200 mA DC, 5...300 mA AC

The information provided in this documentation contains general descriptions and/or technical characteristics of the performance of the products contained herein.
This documentation is not intended as a substitute for and is not to be used for determining suitability or reliability of these products for specific user applications.
It is the duty of any such user or integrator to perform the appropriate and complete risk analysis, evaluation and testing of the products with respect to the relevant specific application or use thereof.
Neither TMSS Holding nor any of its affiliates or subsidiaries shall be responsible or liable for misuse of the information contained herein.

Voltage drop	<5.5 V (closed)
Status LED	Output state: 1 LED (yellow)
Output circuit type	AC/DC
Type of output signal	Discrete
Detection face	Frontal
Discrete output function	1 NO
Switching frequency	<= 25 Hz AC, <= 300 Hz DC
Differential travel	1...15 % of Sr
Delay first up	30 ms
Delay recovery	2 ms
Residual current	0.8 mA open state
Threaded length	41 mm
Length	66 mm
Size	66 mm
Product weight	0.205 kg

Environment

IP degree of protection	IP68 double insulation conforming to IEC 60529, IP69K conforming to DIN 40050
Ambient air temperature for operation	-25...70 °C
Ambient air temperature for storage	-40...85 °C
Shock resistance	50 gn for 11 ms conforming to IEC 60068-2-27
Vibration resistance	25 gn amplitude = +/- 2 mm (f = 10-55 Hz) conforming to IEC 60068-2-6

Offer Sustainability

California proposition 65	WARNING: This product can expose you to chemicals including: Diisononyl phthalate (DINP), which is known to the State of California to cause cancer, and Di-isodecyl phthalate (DIDP), which is known to the State of California to cause birth defects or other reproductive harm. For more information go to www.P65Warnings.ca.gov

Warranty

Warranty	18 months

Packing Units

Country of origin	FR (France)
Unit type of package 1	PCE
Number of units in package 1	1
New Package 1 GTIN-13	3666916011706
Package 1 height	4.2 cm
Package 1 width	9.5 cm
Package 1 length	13.5 cm

Package 1 weight	0.205 kg
Unit type of package 2	S01
Number of units in package 2	11
New Package 2 GTIN 14	13666916011703
Package 2 height	15 cm
Package 2 width	15 cm
Package 2 length	40 cm
Package 2 weight	2.147 kg
Unit type of package 3	CAR
Number of units in package 3	1
New Package 3 GTIN 14	23666916011700
Package 3 height	13.5 cm
Package 3 width	4.2 cm
Package 3 length	9.5 cm
Package 3 weight	0.198 kg

Technical Drawings

Dimensions

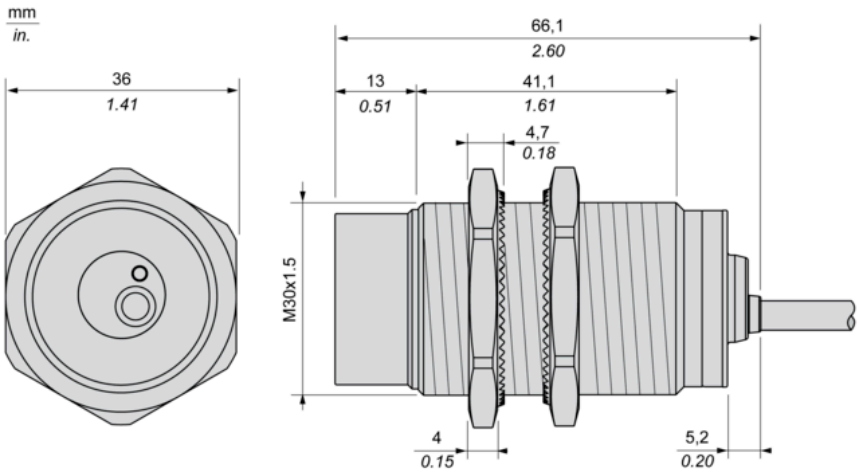

Minimum Mounting Distances in mm

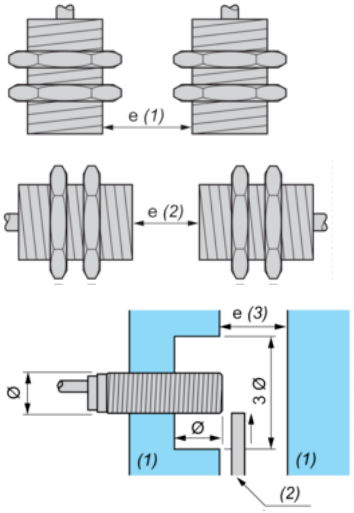

Side by side
e (1) ≥
Face to face
e (2) ≥
Facing a metal object
e (3) ≥
(4)
(5)

Wiring Schemes

2-Wire AC or DC

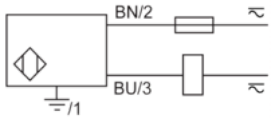

NO output
BU :
BN :