

Product data sheet

XS8C4A1MPG13

Inductive sensor, XS8, 40x40x117 mm, PBT, Sn 20 mm, NO+NC, terminals, 24...240 VAC/DC, flush, 2 wires

Main

Range of product	Telemecanique Inductive proximity sensors XS
Series name	General purpose
Sensor name	XS8
Sensor type	Inductive proximity sensor
Sensor design	Form 40 x 40 x 117
Device application	Not applicable
ETIM classification	ETIM 9 - EC002714 - Inductive proximity switch
Body type	Fixed
Material	Plastic
Front material	PBT
Enclosure material	PBT
[Sn] nominal sensing distance	20 mm
Wiring technique	2-wire
Detector flush mounting acceptance	Flush mountable
Delay response	1.2 ms
Product certifications	CCC CSA UL
Marking	CE
Indivisible sale quantity	1

Complementary

Sensing range	> 15...40 mm
Cable entry number	1 tapped entry for Pg 13.5 cable gland
Repeat accuracy	<= 3% of Sr
Electrical connection	Screw-clamp terminals, 4 x 1.5 mm²
Supply voltage limits	20-264 V AC/DC
[Us] rated supply voltage	24...240 V AC 50/60 Hz, 24...240 V DC
Switching capacity in mA	5...200 mA DC, 5...300 mA AC
Voltage drop	<5.5 V (closed)

The information provided in this documentation contains general descriptions and/or technical characteristics of the performance of the products contained herein.
This documentation is not intended as a substitute for and is not to be used for determining suitability or reliability of these products for specific user applications.
It is the duty of any such user or integrator to perform the appropriate and complete risk analysis, evaluation and testing of the products with respect to the relevant specific application or use thereof.
Neither TMSS Holding nor any of its affiliates or subsidiaries shall be responsible or liable for misuse of the information contained herein.

Status LED	Supply on: 1 LED (green), output state: 1 LED (yellow)
Output circuit type	AC/DC
Type of output signal	Discrete
Detection face	5 positions turret head
Discrete output function	1 NO or 1 NC programmable
Switching frequency	<= 25 Hz AC, <= 50 Hz DC
Differential travel	3...15% of Sr
Delay first up	7.5 ms
Delay recovery	1.8 ms
Residual current	1.5 mA open state 120 V, 0.6 mA open state 24 V
Height	40 mm
Width	117 mm
Length	40 mm
Size	117 mm
Product weight	0.244 kg

Environment

IP degree of protection	IP67 conforming to IEC 60529, IP65 conforming to IEC 60529, IP69K conforming to DIN 40050
Ambient air temperature for operation	-25...70 °C
Ambient air temperature for storage	-40...85 °C
Shock resistance	50 gn for 11 ms conforming to IEC 60068-2-27
Vibration resistance	25 gn amplitude = +/- 2 mm (f = 10-55 Hz) conforming to IEC 60068-2-6

Offer Sustainability

California proposition 65	WARNING: This product can expose you to chemicals including: Diisononyl phthalate (DINP), which is known to the State of California to cause cancer, and Di-isodecyl phthalate (DIDP), which is known to the State of California to cause birth defects or other reproductive harm. For more information go to www.P65Warnings.ca.gov

Warranty

Warranty	18 months

Packing Units

Country of origin	ID (Indonesia)
Unit type of package 1	PCE
Number of units in package 1	1
New Package 1 GTIN-13	3666916010389
Package 1 height	4.2 cm
Package 1 width	4.4 cm
Package 1 length	14 cm

Package 1 weight	0.245 kg
Unit type of package 2	S02
Number of units in package 2	28
New Package 2 GTIN 14	13666916010386
Package 2 height	15 cm
Package 2 width	30 cm
Package 2 length	40 cm
Package 2 weight	7.287 kg
Unit type of package 3	CAR
Number of units in package 3	1
New Package 3 GTIN 14	23666916010383
Package 3 height	4.5 cm
Package 3 width	4.5 cm
Package 3 length	14.5 cm

Technical Drawings

Dimensions

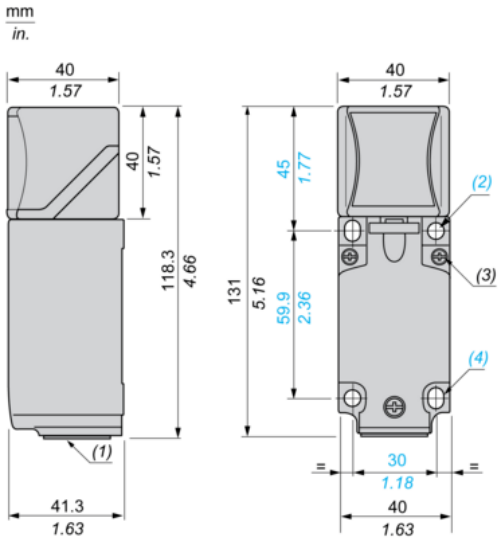

(1) :
(2) :
(3) :
(4) :

Mounting

Head Positions

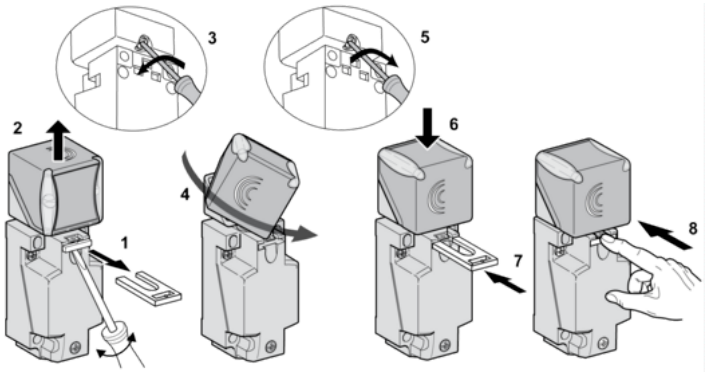

Setting-up Precautions

Minimum Mounting Distances (mm)

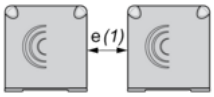

Minimum Mounting Distances (mm)

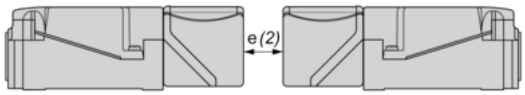

Minimum Mounting Distances (mm)

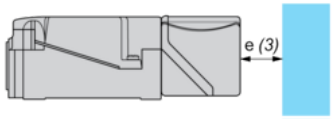

Side by Side
e (1) ≥
Face to Face
e (2) ≥
Facing a Metal Object
e (3) ≥

Wiring Schemes

2-Wire AC or DC (Programmable)

