

Product data sheet

XT512B1PAL2

Capacitive sensor, XT5, M12, brass, Sn 2 mm, PNP, cable 2 m, 24 VDC

Main

Sensor name	XT5
Sensor type	Capacitive proximity sensor
Sensor design	Cylindrical M12
Product specific application	Detection of insulated or conductive materials
ETIM classification	ETIM 9 - EC002715 - Capacitive proximity switch
Body type	Fixed
Material	Nickel copper alloy
Enclosure material	Nickel copper alloy
[Sn] nominal sensing distance	2 mm
Wiring technique	3-wire
Detector flush mounting acceptance	Flush mountable
Delay response	15 ms
ISO thread	M12 x 1
Product certifications	cULus
Marking	CE
Standards	IEC 60947-5-2 UL 61010-1
Indivisible sale quantity	1

Complementary

Sensing range	> 0...2.5 mm
Repeat accuracy	< 0.1 x Sr
Electrical connection	Cable
Cable length	2 m
Wire insulation material	PVC
Supply voltage limits	12-30 V DC
[Us] rated supply voltage	24 V DC with reverse polarity protection
Maximum switching current	200 mA
Electrical insulation class	Class III conforming to IEC 61140

The information provided in this documentation contains general descriptions and/or technical characteristics of the performance of the products contained herein.
This documentation is not intended as a substitute for and is not to be used for determining suitability or reliability of these products for specific user applications.
It is the duty of any such user or integrator to perform the appropriate and complete risk analysis, evaluation and testing of the products with respect to the relevant specific application or use thereof.
Neither TMSS Holding nor any of its affiliates or subsidiaries shall be responsible or liable for misuse of the information contained herein.

Voltage drop	<2.5 V (closed)
Current consumption	< 15 mA
Setting-up	Sensitivity by potentiometer
Status LED	Output state indication: 1 LED (yellow)
Output circuit type	DC
Type of output signal	Discrete
Length of developed helical travel	63 mm
Detection face	Frontal
Discrete output function	1 NO
Switching frequency	<= 40 Hz
Differential travel	< 0.2 x Sr
Delay first up	300 ms
Delay recovery	15 ms
Residual current	0.1 mA open state
Threaded length	40 mm
Size	63 mm
Product weight	0.07 kg

Environment

IP degree of protection	IP67 conforming to IEC 60529, IP65 conforming to IEC 60529
Shock resistance	30 gn for 11 ms conforming to IEC 60068-2-27
Vibration resistance	10 gn amplitude = 1 mm (f = 10-55 Hz) conforming to IEC 60068-2-6
Resistance to fast transients	2 kV conforming to IEC 61000-4-4
Resistance to electromagnetic fields	3 V/m conforming to IEC 61000-4-3
Resistance to electrostatic discharge	4 kV contact conforming to IEC 61000-4-2, 8 kV air conforming to IEC 61000-4-2

Offer Sustainability

California proposition 65	WARNING: This product can expose you to chemicals including: Diisononyl phthalate (DINP), which is known to the State of California to cause cancer, and Di-isodecyl phthalate (DIDP), which is known to the State of California to cause birth defects or other reproductive harm. For more information go to www.P65Warnings.ca.gov

Warranty

Warranty	18 months

Packing Units

Country of origin	CN (China)
Unit type of package 1	PCE
Number of units in package 1	1
New Package 1 GTIN-13	3666916020029

Package 1 height	1.5 cm
Package 1 width	12 cm
Package 1 length	14 cm
Package 1 weight	0.07 kg
Unit type of package 2	S02
Number of units in package 2	80
New Package 2 GTIN 14	13666916020026
Package 2 height	15 cm
Package 2 width	30 cm
Package 2 length	40 cm
Package 2 weight	6.931 kg
New Package 3 GTIN 14	23666916020023

Technical Drawings

Dimensions

Dimensions

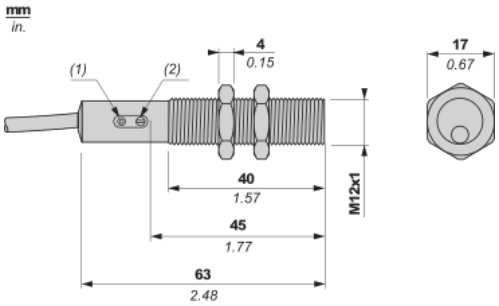

(1)
(2)

Mounting and Clearance

Mounting and Clearance

Sensitivity adjustment

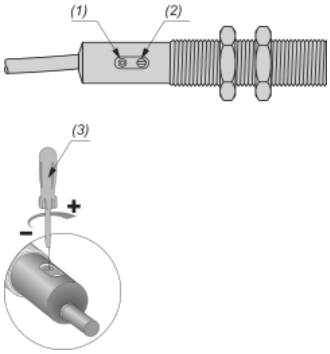

(1)
(2)
(3)

Mounting and Clearance

Mounting and Clearance

Minimum Mounting Distances

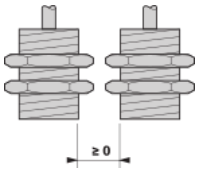

Minimum Mounting Distances

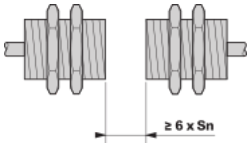

Minimum Mounting Distances

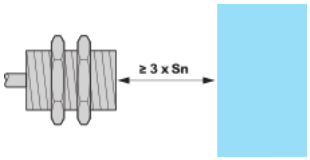

Side by side
Face to face
Facing a Metal Object

Connections and schema

Connections and schema

Wiring diagram

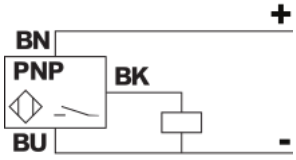

3-wire DC, PNP, NO output, pre-wired
BU:
BN:
BK: