

Product data sheet

XUK9TAH2MM12

Photoelectric sensor XUK, photo electric laser sensor, XUK, reflex, Sn 70 m, 2Q 1Qa 3IN, hoisting app, ToF, hoisting application

Main

Range of product	Telemecanique Photoelectric sensors XU
Series name	Application hoisting
Sensor name	XUK
Electronic sensor type	Photo-electric sensor
Sensor design	Compact 50 x 50
Product specific application	Distance measurement on reflector
ETIM classification	ETIM 9 - EC002717 - Retroreflective photoelectric sensor
Material	Plastic
Lens material	PMMA
Enclosure material	ABS/PC
[Sn] nominal sensing distance	70-70 m polarised reflex need reflector XUZC250
Maximum sensing distance	70 m polarised reflex need reflector XUZC250
Wiring technique	8-wire
Detection system	Polarised reflex
Delay response	10 ms
Indivisible sale quantity	1

Complementary

Sensing range	> 0.3...70 m
Electrical connection	1 male connector M12, 8 pins
Supply voltage limits	10-30 V DC
[Us] rated supply voltage	12...24 V DC with reverse polarity protection
Supply circuit type	DC
Switching capacity in mA	<= 100 mA (overload and short-circuit protection)
Maximum voltage drop	<2 V (closed state)
Current consumption	<= 35 mA no-load
Emission	Red laser polarised reflex class 1 conforming to IEC 60825-1
Setting-up	Using teach button or remote teaching
Output type	Analog solid state

The information provided in this documentation contains general descriptions and/or technical characteristics of the performance of the products contained herein.
This documentation is not intended as a substitute for and is not to be used for determining suitability or reliability of these products for specific user applications.
It is the duty of any such user or integrator to perform the appropriate and complete risk analysis, evaluation and testing of the products with respect to the relevant specific application or use thereof.
Neither TMSS Holding nor any of its affiliates or subsidiaries shall be responsible or liable for misuse of the information contained herein.

Analogue output range	-
Type of output signal	Analogue + discrete
Add on output	With alarm output
Discrete output type	PNP or NPN
Discrete output function	1 NO or 1 NC programmable
Status LED	1 LED (yellow) for output state, 1 LED (green/yellow) for supply on/output state
Delay first up	300 ms
Delay recovery	10 ms
Height	50 mm
Width	23 mm
Depth	50 mm
Product weight	0.035 kg

Environment

IP degree of protection	IP67 conforming to IEC 60529, IP69K conforming to DIN 40050
Ambient air temperature for operation	-20…50 °C
Ambient air temperature for operation	-20-50 °C, UL certified, -30-50 °C
Ambient air temperature for storage	-30…60 °C
Shock resistance	10 gn (duration = 11 ms) conforming to IEC 60068-2-27
Vibration resistance	7 gn (f = 10-55 Hz) conforming to IEC 60068-2-6

Offer Sustainability

California proposition 65	WARNING: This product can expose you to chemicals including: Diisononyl phthalate (DINP), which is known to the State of California to cause cancer, and Di-isodecyl phthalate (DIDP), which is known to the State of California to cause birth defects or other reproductive harm. For more information go to www.P65Warnings.ca.gov

Warranty

Warranty	18 months

Packing Units

Country of origin	DE (Germany)
Unit type of package 1	PCE
Number of units in package 1	1
New Package 1 GTIN-13	3666916037362
Package 1 height	3 cm
Package 1 width	6 cm
Package 1 length	9.2 cm
Package 1 weight	0.055 kg
Unit type of package 2	S01

Number of units in package 2	28
New Package 2 GTIN 14	13666916037369
Package 2 height	15 cm
Package 2 width	15 cm
Package 2 length	40 cm
Package 2 weight	1.641 kg
Unit type of package 3	S02
Number of units in package 3	30
New Package 3 GTIN 14	23666916037366
Package 3 height	15 cm
Package 3 width	30 cm
Package 3 length	40 cm

Technical Drawings

Dimensions

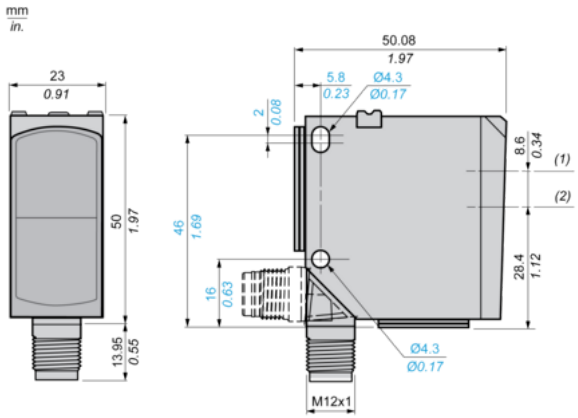

(1)
(2)

Connections and Schema

Connector Wiring

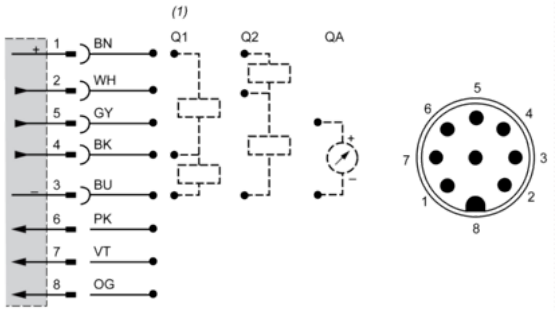

(1)
1 :
2 :
3 :
4 :
5 :
6 :
7 :
8 :

Mounting

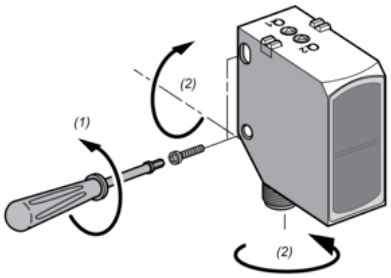

(1)
(2)