

Product data sheet

XUM2APXBL2

Photoelectric miniature receiver XUM, thru-beam, Smax 30 m, 24 V, cable 2 m, PNP, NO/NC

Main

Range of product	Telemecanique Photoelectric sensors XU
Series name	General purpose single mode
Sensor name	XUM
Electronic sensor type	Photo-electric sensor
Sensor design	Miniature
Kit composition	Transmitter + receiver XUM2AKXBL2T + XUM2APXBL2R
ETIM classification	ETIM 9 - EC002716 - Through beam photoelectric sensor
Material	Plastic
Lens material	PMMA
Enclosure material	PBT
[Sn] nominal sensing distance	20-20 m
Maximum sensing distance	30 m
Wiring technique	3-wire
Detection system	Thru beam
Delay response	0.5 ms
Indivisible sale quantity	1

Complementary

Sensing range	0...30 m
Electrical connection	Cable
Cable length	2 m
Supply voltage limits	10-30 V DC
[Us] rated supply voltage	12...24 V DC with reverse polarity protection
Supply circuit type	DC
Switching capacity in mA	<= 100 mA with overload and short-circuit protection
Maximum voltage drop	<2 V
Current consumption	20 mA for transmitter, 20 mA for receiver
Emission	-
Setting-up	Sensitivity by potentiometer

The information provided in this documentation contains general descriptions and/or technical characteristics of the performance of the products contained herein.
This documentation is not intended as a substitute for and is not to be used for determining suitability or reliability of these products for specific user applications.
It is the duty of any such user or integrator to perform the appropriate and complete risk analysis, evaluation and testing of the products with respect to the relevant specific application or use thereof.
Neither TMSS Holding nor any of its affiliates or subsidiaries shall be responsible or liable for misuse of the information contained herein.

Status LED	-
Output type	Solid state
Type of output signal	Discrete
Discrete output type	PNP
Discrete output function	1 NO or 1 NC programmable
Switching frequency	1000 Hz
Delay first up	100 ms
Delay recovery	0.5 ms
Height	33 mm
Width	10 mm
Depth	20 mm
Product weight	0.119 kg

Environment

IP degree of protection	IP67 conforming to IEC 60529, IP65 conforming to IEC 60529
Ambient air temperature for storage	-40...70 °C
Shock resistance	100 gn (duration = 11 ms) for for every axis conforming to IEC 60068-2-27
Vibration resistance	9 gn, amplitude = +/- 1.5 mm (f = 10-500 Hz)for every axis conforming to IEC 60068-2-6
Relative humidity	35-95 %
Immunity to ambient light	40000 lux sunlight, 10000 lux incandescent light

Offer Sustainability

California proposition 65	WARNING: This product can expose you to chemicals including: Diisononyl phthalate (DINP), which is known to the State of California to cause cancer, and Di-isodecyl phthalate (DIDP), which is known to the State of California to cause birth defects or other reproductive harm. For more information go to www.P65Warnings.ca.gov

Warranty

Warranty	18 months

Packing Units

Country of origin	ID (Indonesia) JP (Japan)
Unit type of package 1	S04
Number of units in package 1	80
New Package 1 GTIN-13	3666916000205
Package 1 height	30 cm
Package 1 width	40 cm
Package 1 length	60 cm
Package 1 weight	0.096 kg
Unit type of package 2	S04

Number of units in package 2	80
New Package 2 GTIN 14	13666916000202
Package 2 height	30 cm
Package 2 width	40 cm
Package 2 length	40 cm
Package 2 weight	9.2 kg
New Package 3 GTIN 14	23666916000209

Technical Drawings

Dimensions

Dimensions

Transmitter

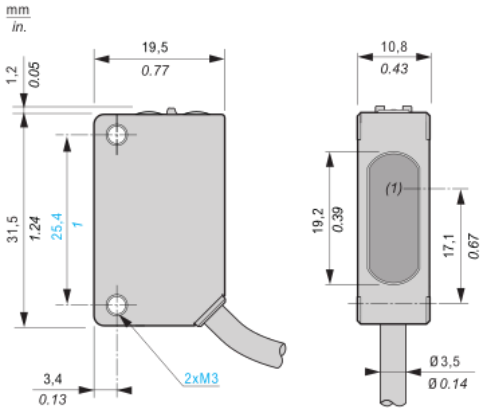

(1) :

Dimensions

Receiver

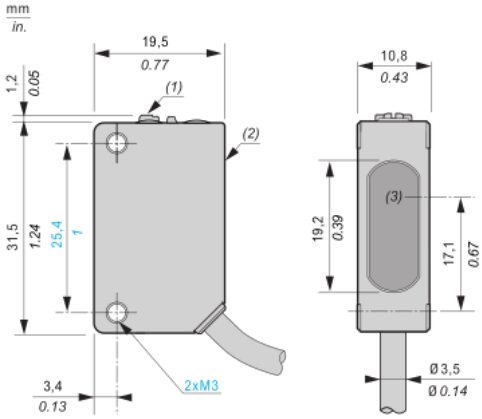

(1) :
(2) :
(3) :

Connection and schema

Connection and schema

Wiring diagram

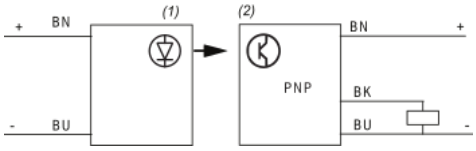

BN (Brown):
BK (Black):
BU (Blue):
(1):
(2):

Detection curves

Detection curves

Lateral displacement

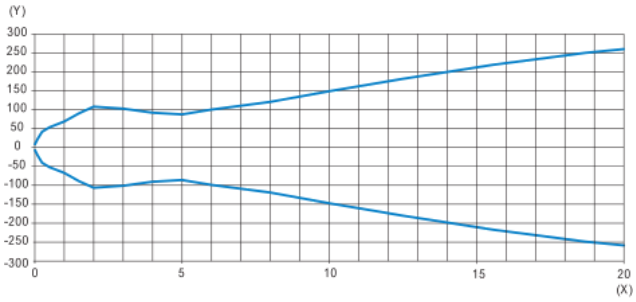

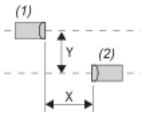

(1):
(2):
(X):
(Y):

Detection curves

Light beam diameter

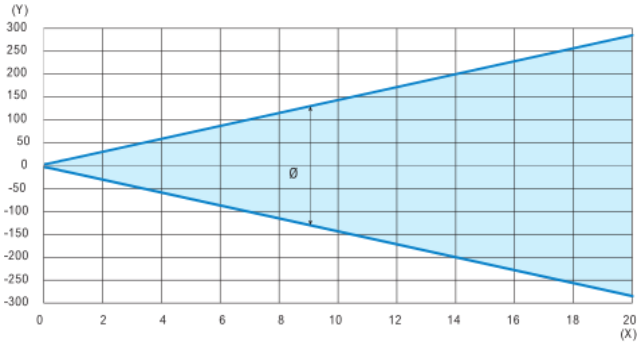

(X):
(Y):

Detection curves

Excess gain

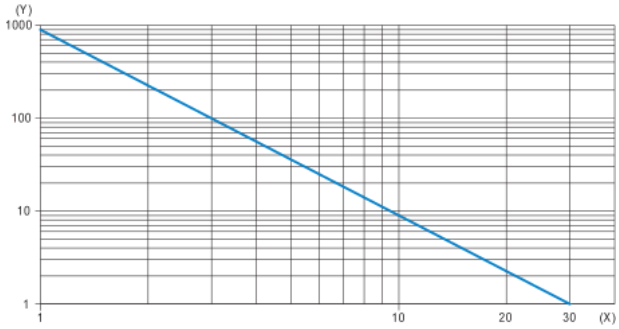

(X):
(Y):