

Product data sheet

XUSL2E30H061N

Safety light curtain, type 2, hand protection, R30, protected height 610 mm, sensing range 4–12 m

Main

Range of product	Telemecanique Safety light curtains XUSL
Offer type	Standard distance
Product or component type	Safety light curtain type 2
Device short name	XUSL2E
Kit composition	adjustable mounting bracket(s), 1 receiver(s), 1 transmitter(s), 1 user guide with certificate of conformity on CD-ROM
Product specific application	For hand protection
ETIM classification	ETIM 9 - EC002549 - Light curtain
Material	Aluminium: casing, polycarbonate: front panel, polypropylene: end caps
Housing colour	Red RAL 3000
Fixing mode	By fixing brackets
Safety level	Type 2 conforming to IEC 61496-1, category 2 conforming to ISO 13849-1, SIL 1 conforming to IEC 61508, SILCL 1 conforming to IEC 62061, PL = c conforming to ISO 13849-1
Safety reliability data	PFHd = 3.92E-8 1/h conforming to IEC 61508
Height protected	610 mm
Number of beams	31
[Sn] nominal sensing distance	0-12 m by cabling, 0-4 m by cabling
Control type	Selected by wiring
Detection system	Transmitter-receiver system
Minimum object diameter for detection	30 mm
Type of start	Automatic manual
Product certifications	CE cULus TÜV
Marking	CE
Directives	89/336/EEC - electromagnetic compatibility 89/655/EEC - work equipment 98/37/EEC - machinery
Indivisible sale quantity	1

The information provided in this documentation contains general descriptions and/or technical characteristics of the performance of the products contained herein.
This documentation is not intended as a substitute for and is not to be used for determining suitability or reliability of these products for specific user applications.
It is the duty of any such user or integrator to perform the appropriate and complete risk analysis, evaluation and testing of the products with respect to the relevant specific application or use thereof.
Neither TMSS Holding nor any of its affiliates or subsidiaries shall be responsible or liable for misuse of the information contained herein.

Complementary

Electrical connection	1 male connector M12 5 pins transmitter, 1 male connector M12 8 pins receiver
[Us] rated supply voltage	24 V DC +/- 20 %
Supply	Power supply conforming to IEC 61496-1, power supply conforming to IEC 60204-1
Voltage drop	<0.5 V
[Ie] rated operational current	2 A
Current consumption	42 mA no-load transmitter, 83 mA no-load receiver, 42 mA transmitter, 900 mA with maximum load receiver
Response time	10 ms
Emission	IR LED 950 nm
Local signalling	1 multi-colour LED transmitter, 2 dual colour LEDs receiver
Output type	2 safety outputs OSSD solid-state PNP (arc suppression)
Output circuit type	DC
[EAA] effective aperture angle	5 ° at 3 m
Output voltage	24 V
Output current limits	0.4 A for safety outputs OSSD
Function available	Test, muting through external safety module XPSLCMUT1160, LED display of operating modes and faults
Average diagnostic coverage	DCavg = 90.7 % conforming to ISO 13849-1
Service life	20 year
Product weight	1.2 kg

Environment

Environmental characteristic	Resistance to light disturbance conforming to IEC 61496-2
IP degree of protection	IP65, IP67
Ambient air temperature for operation	-10...55 °C
Ambient air temperature for storage	-25...70 °C
Shock resistance	10 gn for 16 ms conforming to IEC 61496-1
Vibration resistance	0.35 +/- 0.05 mm (f= 10-55 Hz) conforming to IEC 61496-1
Relative humidity	0-95 % without condensation

Offer Sustainability

California proposition 65	WARNING: This product can expose you to chemicals including: Diisononyl phthalate (DINP), which is known to the State of California to cause cancer, and Di-isodecyl phthalate (DIDP), which is known to the State of California to cause birth defects or other reproductive harm. For more information go to www.P65Warnings.ca.gov

Warranty

Warranty	18 months

Packing Units

Country of origin	IT (Italy)
Unit type of package 1	PCE
Number of units in package 1	1
New Package 1 GTIN-13	3666916028865
Package 1 height	69.8 cm
Package 1 width	20 cm
Package 1 length	14.2 cm
Package 1 weight	1.2 kg
Unit type of package 2	CAR
Number of units in package 2	1
New Package 2 GTIN 14	13666916028862
Package 2 height	70 cm
Package 2 width	14 cm
Package 2 length	19.5 cm
Package 2 weight	2.4 kg
Unit type of package 3	P06
Number of units in package 3	8
New Package 3 GTIN 14	23666916028869
Package 3 height	75 cm
Package 3 width	60 cm
Package 3 length	80 cm

Technical Drawings

Dimensions

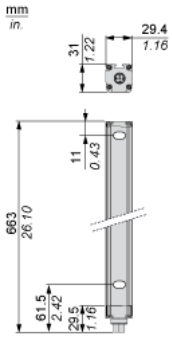

Brackets Dimensions

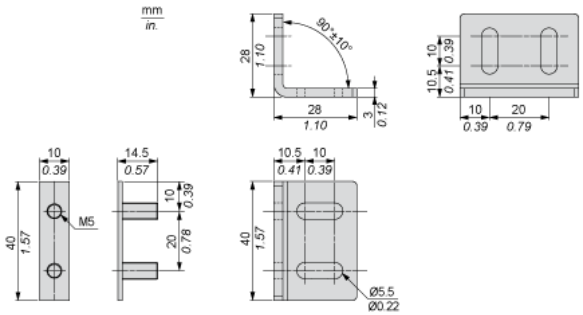

Mounting and Clearance

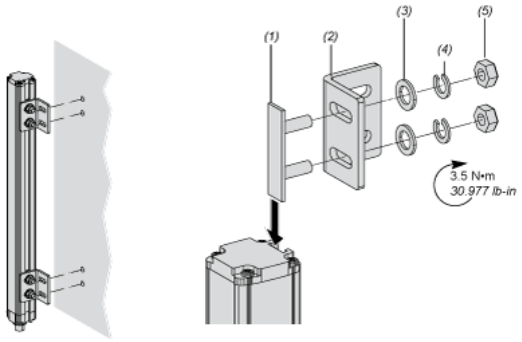

- (1) Insert
- (2) Bracket
- (3) Washer
- (4) Spring washer
- (5) Nut

Wiring Diagrams

Transmitter Connections

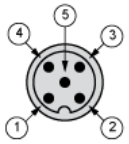

- (1) +24 Vdc
- (2) Configuration_0
- (3) 0 Vdc
- (4) Configuration_1
- (5) FE

Wiring Diagrams

Receiver Connections

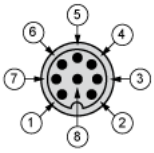

- (1) +24 Vdc
- (2) Configuration_0
- (3) 0 Vdc
- (4) Configuration_1
- (5) FE
- (1) OSSD1
- (2) + 24 V
- (3) OSSD2
- (4) Configuration_A
- (5) K1_K2 Feeback/Restart
- (6) Configuration_B
- (7) 0 Vdc
- (8) FE

Receiver Configurations and Operating Modes

Automatic Start/Restart

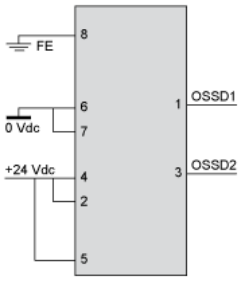

Automatic Start/Restart

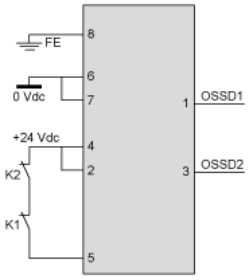

Receiver Configurations and Operating Modes

Manual Start/Restart

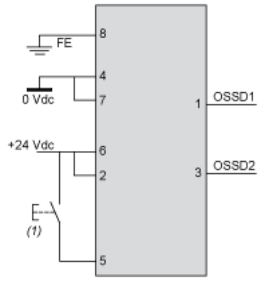

- (1) Restart

Manual Start/Restart

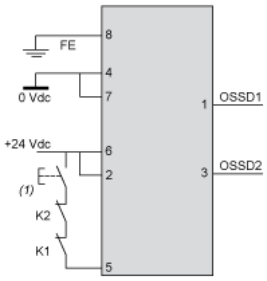

- (1) Restart
- (1) Restart

Connecting to a Safety Interface

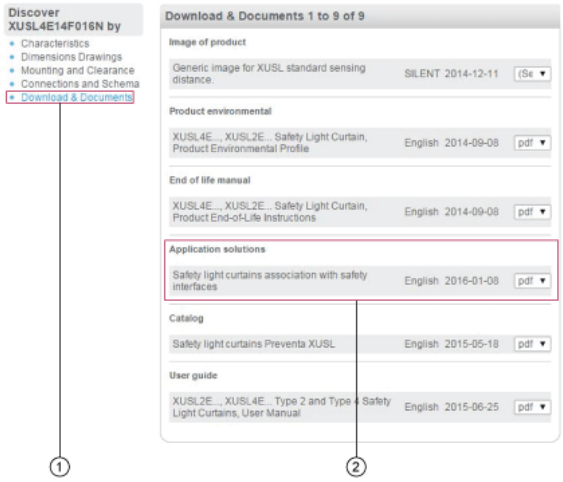

- 1 : Click on Download & Documents
- 2 : Click on Application solutions

To have all connection schematics concerning our safety module, select "download and document" and download the file "Safety light curtains association with safety interfaces"